您好

爲配合您完美無瑕的個人風格而精心打造，輕巧時尚的 Nokia 6060 在各方面均帶來極具震撼的效果。留意她的時尚鍍鉻外殼，玲瓏的曲線令其優雅盡現。在充滿美感的外觀下內置一個具有閃燈效果的 LED 螢幕，提醒您正在接收和未接的來電 — 一項獨特而有實效的功能，特別是當您的手機設定爲靜音模式的時候。

如果她的外表足以令您心動，別著急，好戲還在裡頭！當您打開 Nokia 6060 時，便會發現其包羅萬有的功能在眾多方面都能配合您富時代感的生活風格。要與其他人保持聯繫實在輕而易舉—只需翻一翻那 500 個項目的電話簿，即可致電、發送短訊或多媒體訊息至您的親朋好友。65,536 色螢幕讓您以更大的字體鍵入數字或文字，亦可更改字體顏色來迎合您的口味，令您的螢幕檢視更貼近所需。

還不只於此！您亦可隨心所欲挑選可供下載的 Java™ 遊戲與好友較量一番。利用獨一無二的背景圖案和動畫螢幕保護令手機顯示加添個人色彩。也可使用 16 首預載多和弦鈴聲 (MIDI) 個人化來電。透過高速 xHTML 瀏覽器進入您喜愛的 Wap 網站。或者，透過一些實用的功能，例如：日曆、響鬧、待辦事項及開支經理等爲您編排社交及工作生活。

Nokia 6060，如此順滑細膩！爲型格通訊帶來全新演繹。

歡迎使用

諾基亞 流動電話

發光顯示屏

聽筒

電源鍵

- 按住幾秒鐘可開啓及關閉手機。

結束鍵

- 結束或拒絕通話。亦可從任何功能中退回至待機模式。

4 方向導航鍵

使用這些鍵在姓名、電話號碼、功能表和設定中導覽；或移動游標；或在文字編輯中突出顯示。

秘訣：在待機模式下，按導航鍵快速進入某些功能。

- 按 ◂ 建立文字訊息。
- 按 ▸ 進入日曆。
- 按 ▾ ▴ 進入通訊錄。

選擇鍵

- 執行螢幕底部文字顯示的功能。
- 在通話時，按右選擇鍵啓動免提喇叭。

音量鍵

- 調校聽筒、喇叭或耳機的音量(當已連接至手機時)。

通話鍵

- 當瀏覽流動服務時按 ⌐ 作爲快捷操作鍵以選擇功能。
- 在待機模式下：按 ⌐ 顯示最近撥打的電話號碼。

留言信箱鍵

- 當手機已儲存留言信箱號碼時，按住 1 ∞ 致電您的留言信箱(網絡服務)。

請注意此處顯示的手機螢幕可能不是預設的螢幕設定。

一致性聲明

本公司 (NOKIA CORPORATION) 聲明產品 RH-73 符合下列說明委員會 (Council Directive) 的規定：1999/5/EC.
一份一致性聲明的副本可於
http://www.nokia.com/phones/declaration_of_conformity/ 內找到。

CE 434

Copyright © 2005 Nokia。版權所有。

未取得 Nokia 的事先書面同意，嚴禁以任何形式複製、傳輸、分發或儲存本文件部份或全部內容。

Nokia 和 Nokia Connecting People 是 Nokia Corporation 的商標或註冊商標。本文所提及的其他產品及公司名稱可能分別爲其各自擁有者之商標或註冊商標。

Nokia tune 是 Nokia Corporation 的聲音標誌。

美國專利號碼 5818437，其他專利權正在申請。T9 文字輸入軟件 Copyright © 1997-2005。Tegic Communications, Inc. 版權所有。

包括 RSA BSAFE 密碼編譯或來自 RSA Security 的安全協定軟件。

Java 是 Sun Microsystems, Inc. 的商標。

Nokia 奉行持續研發的政策。Nokia 保留對本文所描述之任何產品進行更改及改進的權利，恕不預先通知。

任何情況下對資料遺失、收益損失或因此所引致的任何特別的、意外的、連帶的或非直接的損壞，Nokia 恕不負責。

本文件的內容以「現有形式」提供。除適用的法律要求外，有關本文內容的正確性及可靠性，包括但不限於對特殊目的的適銷性及適用性均不提供任何明示或默示的保證。Nokia 保留隨時修訂或收回本文件之權利，恕不預先通知。

具體產品的供應情況可能因地區而有所不同。請向您就近的 Nokia 經銷商查詢。

此裝置可能包含受美國或其他國家出口法律和條例約束的商品、技術或軟件。禁止違法轉移。

9241647
第 1 版

繁體中文

目錄

安全規定 vii

一般資料 xi
功能概覽 xi
密碼 xi
保密碼 xi
PIN 碼 xii
PUK 碼 xii
限制密碼 xii
配置設定服務 xiii
下載的內容和應用程式 xiii
Nokia 網上支援 xiv

1. 開始使用 1
打開翻蓋 1
安裝 SIM 卡和電池 1
爲電池充電 3
開啓及關閉手機 3
隨插即用服務 4
正常操作姿勢 4

2. 您的手機 5
按鍵及部件 5
待機模式 6
螢幕 7
個人快捷操作列表 7
待機模式下的快捷操作 8
省電功能 8
指示符號 9
鍵盤鎖 (按鍵保護) 10

3. 通話功能 11
撥打電話 11
單鍵撥號 11
接聽或拒絕來電 12
來電等待 12
在通話期間的選項 12

4. 輸入法 14
選擇編寫語言 14
輸入法指示符號 14
在輸入法之間互相切換 15
筆劃輸入法 15
拼音輸入法 17
輸入字元 18
字元智慧輸入法 18
重複輸入 18
使用傳統英文輸入法 19
開啓或關閉智慧預測型
英文輸入法 19

使用智慧預測型英文輸入法 19
輸入組合詞彙 20
輸入文字的秘訣 20

5. 瀏覽功能表 22

6. 訊息 23
文字訊息 (SMS) 23
編寫及發送 SMS 訊息 24
閱讀及回覆 SMS 訊息 24
範本 25
多媒體訊息 (MMS) 25
編寫及發送多媒體訊息 26
閱讀及回覆多媒體訊息 27
記憶體已滿 28
資料夾 29
快顯訊息 30
編寫快顯訊息 30
接收快顯訊息 30
電郵應用程式 30
編寫及發送電郵 31
下載電郵 31
閱讀及回覆電郵 32
收件夾和其他資料夾 32
刪除電郵訊息 32
留言訊息 33
廣播訊息 33
服務指令 33
刪除訊息 33
訊息設定 34
文字及 SMS 電郵 34
多媒體 34
電郵 35
其他設定 36
訊息計數器 36

7. 通話記錄 37
最近通話列表 37
計數器及計時器 37

8. 通訊錄 38
在通訊錄中尋找姓名 38
使用尋找指令尋找 38
使用 pop-up 視窗尋找 38
儲存姓名及電話號碼 39
儲存電話號碼、項目或圖像 39
複製聯絡人 40
編輯聯絡人詳情 40
刪除聯絡人或聯絡人詳情 40
名片 41
我的動態顯示 41
已申請的名單 42
添加聯絡人至已申請的名單 ... 43
查看已申請的名單 43
取消申請聯絡人 43
設定 44
群組 44

單鍵撥號 44
廣播、服務及本手機號碼 45

9. 設定 46
操作模式 46
佈景 46
鈴聲 47
燈光 47
我的快捷操作 47
螢幕 48
時間和日期 49
通話 49
手機 50
數據連線 51
增強配套 52
配置 52
保密 53
恢復原廠設定 54

10. 多媒體資料 55

11. 電子秘書 56
鬧鐘 56
停止響鬧 56
日曆 57
建立日曆備註 57
備註響鬧 57
農曆 58
待辦事項 58
備註 59
計算機 59
計時錶 60
倒數計時器 61

12. 應用程式 62
遊戲 62
啓動遊戲 62
遊戲下載 62
遊戲設定 62
集合 63
啓動應用程式 63
其他應用程式選項 63
下載應用程式 64

13. 網絡 65
設定瀏覽 65
連接至服務 65
瀏覽網頁 66
用手機按鍵瀏覽 66
瀏覽時可用的選項 67
直接撥號 67
外觀設定 67
Cookies 68
透過安全連接的指令檔 68
書籤 68
接收書籤 69
下載檔案 69

服務信箱 70
服務信箱設定 70
快取記憶體 71
定位資料 71
瀏覽器安全性 71
安全模組 72
證書 73
數碼簽名 73

14. SIM 服務 75

15. 電池資料 76
充電及放電 76

16. 原廠增強配套 78
電量 78
標準充電器 (ACP-7) 79
旅行充電器 (ACP-12) 79
音效 80
Nokia 耳機 HDC-5 80

17. 保養及維修 81

18. 其他安全資料 83

有限保證 88

索引 90

安全規定

請閱讀下列簡易的使用準則。違反這些準則可能會產生危險或觸犯法律。請閱讀完整的用戶指南以獲取進一步資料。

安全規定

當禁止使用無線電話，或可能造成干擾或危險時，請勿開機。

行車安全第一

請遵守當地所有法律。駕車時務請使雙手能夠自由控制車輛。駕車時您應首先考慮行車安全。

干擾

所有的無線電話都容易受到干擾，影響效能。

在醫院內請關機

請遵守所有限制。位處醫療儀器附近請關機。

在飛機上請關機

請遵守所有限制。無線裝置對飛機飛行會造成干擾。

加油時請關機

請不要在加油站使用手機。請不要在燃料或化學品附近使用手機。

進行爆破時請關機

請遵守所有限制。進行爆破工程時，請不要使用手機。

正確使用

請僅按照產品文件中所述的正常姿勢使用手機。如非必要，請勿觸摸天線。

合格的服務

只容讓合資格的服務人員安裝或維修本產品。

增強配套及電池

僅使用許可的增強配套及電池。不要連接不兼容的產品。

防水性

您的手機並不防水。請保持乾燥。

備份資料

請記住爲儲存於您手機內的重要資料備份或保留手寫記錄。

與其他裝置相連

在連接任何其他裝置時，請先閱讀其用戶指南，獲取詳細的安全指引。不要連接不兼容的產品。

緊急電話

確定手機已經開啓且處於服務區域內。視情況按結束鍵所需次數以清除螢幕並返回至開始螢幕。輸入緊急電話號碼，然後按通話鍵。說明您的位置。當允許您掛掉電話時才可結束通話。

■ 有關您的裝置

本手冊所敘述的無線裝置適用於 GSM 900/1800 網絡。請與您的服務供應商聯絡以獲取更多有關網絡的資料。

當使用本裝置的功能時，請遵守所有法律及尊重他人的隱私權和合法權利。

警告：要使用本裝置的任何功能 (除響鬧外)，需要先開啓本裝置。當使用無線裝置可能會造成干擾或危險時，請不要開機。

■ 網絡服務

要使用手機，您需要有無線服務供應商提供的服務。本裝置許多功能的使用需視乎無線網絡的功能而定。這些網絡服務也許並未在所有網絡上都提供，或者可能需要向服務供應商作出特別申請才能使用網絡服務。服務供應商需要向您提供使用這些服務的附加限制，及說明要收取的費用。部份網絡可能有影響您使用網絡服務的限制。例如，有些網絡可能無法支援所有受語言影響的字元和服務。

服務供應商可能會要求您關閉或不要啓動裝置的某些功能。這樣，這些功能將不會顯示於您裝置的功能表中。您的裝置亦可能已進行了特殊配置。此配置可能包含功能表名稱、功能表次序以及圖標中的變更。請與您的服務供應商聯絡以獲取更多資料。

本裝置支援在 TCP/IP 協定上運行的 WAP 2.0 協定 (HTTP 及 SSL)。本裝置的某些功能，例如：文字訊息、多媒體訊息、電郵、動態通訊錄、流動互聯網服務及下載的內容和應用程式，均要求網絡支援這些技術。

■ 共享記憶體

手機有兩種記憶體。以下功能可能共享第一種記憶體：通訊錄、文字訊息、多媒體訊息 (但不包括附件)、群組、日曆及待辦事項備註。多媒體資料中儲存的檔案、多媒體訊息的附件、電郵及 Java™ 應用程式使用第二種共享記憶體。使用其中一項或多項功能可能會減少其他使用共享記憶體功能的可用記憶體。例如：儲存多個 Java 應用程式可能會使用所有可用記憶體。當您嘗試使用需要共享記憶體的功能時，您的裝置可能會顯示記憶體已滿的訊息。在這種情況下，先刪除共享記憶體功能中的某些資料或某些項目，然後再繼續。某些功能 (例如：文字訊息) 除了與其他功能共用記憶體外，可能還會獲分配一些額外的記憶體。

■ 增強配套

有關配件和增強配套的一些實用守則如下：

- 請將所有配件和增強配套置於兒童無法觸及的地方。
- 拔除任何配件或增強配套的電源時，請握住插頭並拔出，不要拉電線。
- 請定期檢查汽車中所有的增強配套是否已裝妥並且操作正常。
- 僅容許合資格的人員安裝複雜的車用增強配套。

一般資料

功能概覽

手機提供許多適合日常應用的功能，例如：日曆、時鐘與及鬧鐘。您的手機亦支援以下功能：

- 可伸延超文本標記語言 (XHTML) (請參閱 「網絡」，刊於第 65 頁。)
- 電郵應用程式，(請參閱 「電郵應用程式」，刊於第 30 頁。)
- 動態增強通訊錄 (請參閱 「我的動態顯示」，刊於第 41 頁。)
- Java 2 Platform, Micro Edition (J2ME™) (請參閱 「應用程式」，刊於第 62 頁。)

密碼

保密碼

保密碼 (5 至 10 位數) 可防止他人未經授權便使用您的手機。預設的密碼爲 12345。要更改此密碼，並將手機設定成需要輸入密碼，請參閱 「保密」，刊於第 53 頁。

PIN 碼

個人識別碼 (PIN) 碼及通用個人識別碼 (UPIN) 碼 (4 至 8 位數) 可防止他人未經授權便使用您的 SIM 卡。請參閱 「保密」，刊於第 53 頁。

PIN2 碼 (4 至 8 位數) 可能隨 SIM 卡提供，對於某些功能需要此碼。

存取安全模組內的資料時要求模組 PIN 碼。請參閱 「安全模組」，刊於第 72 頁。

數碼簽名時需要簽名 PIN 碼。請參閱 「數碼簽名」，刊於第 73 頁。

PUK 碼

更改鎖定的 PIN 碼及 UPIN 碼分別需要個人解鎖碼 (PUK) 碼及通用個人解鎖碼 (UPUK) 碼 (8 位數)。更改鎖定的 PIN2 碼 (8 位數) 時需要 PUK2 碼。如果此密碼未隨 SIM 卡提供，請與您的本地服務供應商聯絡以獲取此密碼。

限制密碼

當使用通話限制時需要限制密碼 (4 位數)。請參閱 「保密」，刊於第 53 頁。

配置設定服務

要使用某些網絡服務 (例如：流動互聯網服務及多媒體訊息服務)，您的手機需要正確的配置設定。您可以直接以配置訊息的形式接收設定。在接收設定後，您需要在手機上儲存這些設定。服務供應商可能提供儲存設定所需的 PIN 碼。如要獲取更多有關供應的資料，請與您的網絡商、服務供應商、就近的 Nokia 授權經銷商聯絡或瀏覽 Nokia 網站的支援區域 www.nokia.com.hk/support。

當您收到配置訊息時，會顯示收到配置設定。

要儲存設定，選擇**顯示** > **儲存**。如果手機要求輸入設定 PIN 碼：，爲設定輸入 PIN 碼，然後選擇**確認**。要接收 PIN 碼，請與提供設定的服務供應商聯絡。如果還沒有儲存設定，這些設定將作爲預設配置設定儲存及設定。否則，手機會詢問啓動已存配置設定？。

要放棄接收的設定，選擇**退出**或**顯示** > **放棄**。

要編輯設定，請參閱 「配置」，刊於第 52 頁。

下載的內容和應用程式

您可以下載新的內容 (例如：佈景主題) 至您的手機 (網絡服務)。選擇下載功能 (例如：在多媒體資料功能表內)。要存取下載功能，請參閱各自的功能表指引。如要獲取不同服務的供應、價格與收費的資料，請與您的服務供應商聯絡。

重要資料：僅使用您信賴及提供充分安全保證的服務，抵禦有害軟件。

Nokia 網上支援

請瀏覽 www.nokia.com.hk/support 或您當地的 Nokia 網站獲取用戶指南、附加資料、下載內容及與您 Nokia 產品相關服務的最新版本。

1. 開始使用

■ 打開翻蓋

當您打開手機的翻蓋時，翻蓋將以大約 154 度角開啓。不要試圖用力增大翻蓋的角度。

■ 安裝 SIM 卡和電池

在移除電池前務必關閉裝置及取下充電器。

請將所有 SIM 卡置於兒童無法觸及的地方。如要獲取有關 SIM 服務的供應及資料，請與您的 SIM 卡經銷商聯絡。也可能是服務供應商、網絡商或其他經銷商。

本裝置適用 BL-5B 電池。

SIM 卡及其觸點很容易因刮痕或彎曲而損壞，因此使用、插入或取出 SIM 卡時要加倍小心。

要移除手機的後殼，滑動後殼並從手機取下 (1)。

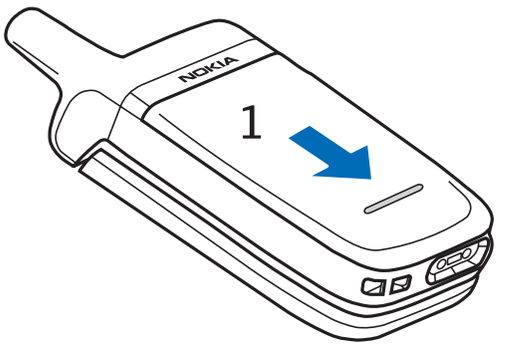

如圖 (2) 所示移除電池。鬆開 SIM 卡固定夾 (3)。

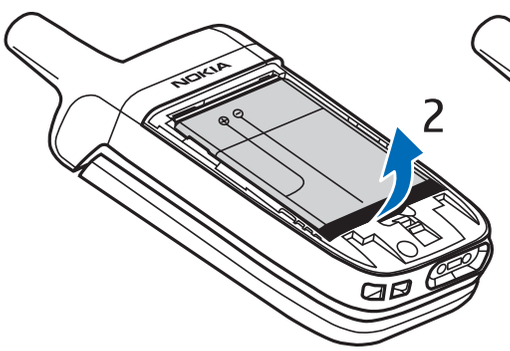

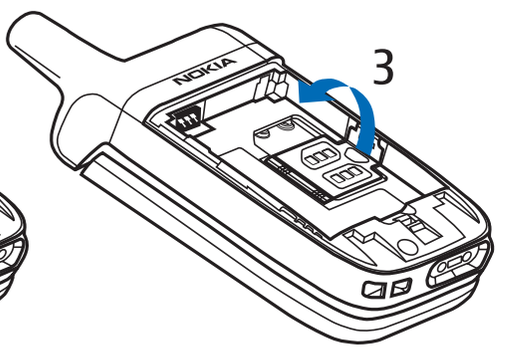

插入 SIM 卡 (4)。
確保 SIM 卡正確地插入，並且卡的金色接觸面朝下。關閉 SIM 卡夾 (5)，然後輕按直至聽到「啪」的一聲，表示已固定到位。

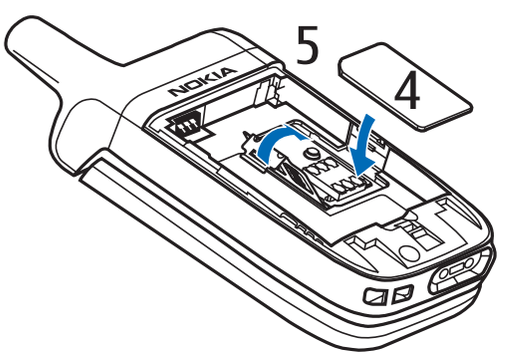

放回電池 (6)。注意電池的接觸區。請謹記堅持使用 Nokia 原廠電池。

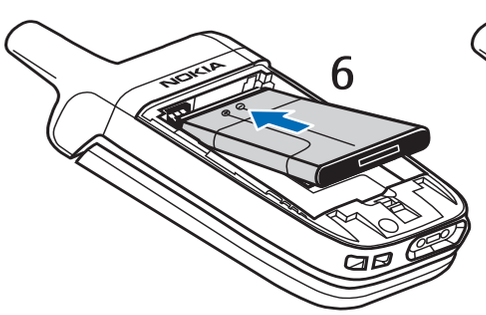

滑動後殼直至固定到位 (7)。

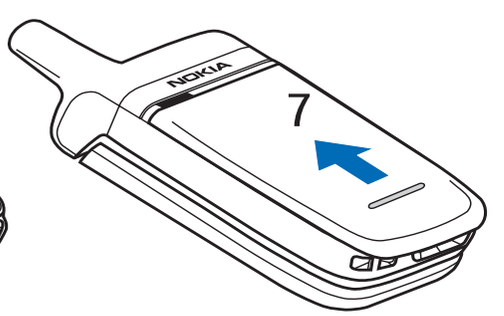

為電池充電

警告：僅使用經 Nokia 許可、適用於本特定型號的電池、充電器及增強配套。使用其他未經認可的配件，可能會令保養失效，甚至造成危險。

將充電器用於本裝置之前，請先檢查充電器的型號。本裝置適用於隨手機提供的 ACP-7 或 ACP-12 充電器。

如要獲取有關許可增強配套的供應情況，請向您的經銷商查詢。當您拔除任何配件的電源時，請握住插頭然後拔出，不要拉電線。

1. 將充電器連接到牆上的交流電源插座。
2. 把充電器的導線連接至手機底部的插孔。

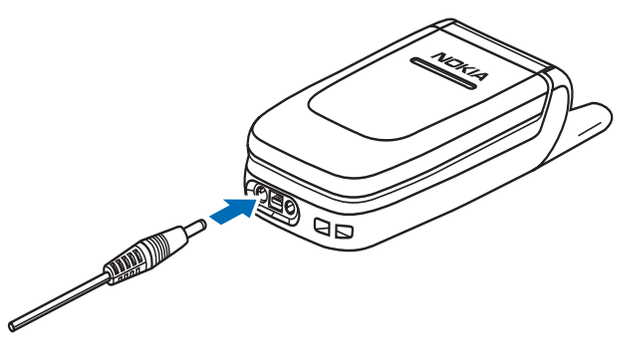

充電的時間根據充電器與電池的使用情況不同而有所分別。

如果電池已完全放電，可能要過幾分鐘充電指示符才會出現在顯示幕上才能撥打電話。

開啟及關閉手機

警告：當禁止使用無線電話，或可能造成干擾或危險時，請勿開機。

長按結束鍵。

如果手機要求 PIN 碼或 UPIN 碼，輸入密碼，(以 **** 顯示)，然後選擇**確認**。

隨插即用服務

當您第一次開啓手機並且手機處於待機模式下時，會要求您從服務供應商處獲取配置設定 (網絡服務)。確認或拒絕要求。請參閱連接至服務供應商支援，刊於「配置」，第 52 頁，及「配置設定服務」，第 xiii 頁。

■ 正常操作姿勢

請僅以正常操作姿勢使用手機。

您的裝置配備外置天線。

注意：如同任何其他無線電發送裝置一樣，開啓裝置時請勿接觸天線。接觸天線會影響通話質素，並可能增加裝置的耗電量。操作裝置時，避免接觸天線區域可令天線的性能和電池壽命達至最佳狀態。

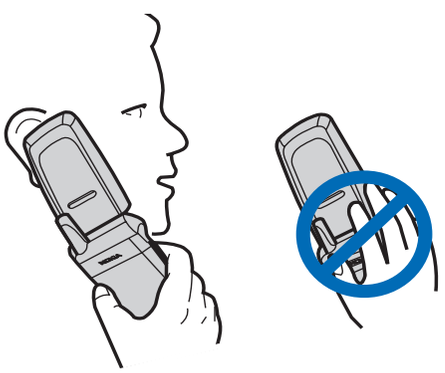

2. 您的手機

按鍵及部件

- 聽筒 (1)
- 螢幕 (2)
- 左選擇鍵 (3)

  中間選擇鍵 (4)

  右選擇鍵 (5)

  按鍵的功能見按鍵上方螢幕上顯示的說明文字。
- 4 方向導航鍵 (6)

  向上、下、左和右捲動。
- 通話鍵 (7)
- 結束鍵和電源鍵 (8)
- 充電器插孔 (9)
- 耳機插孔 (10)
- 麥克風 (11)
- 縛上電話繩的小孔 (12)

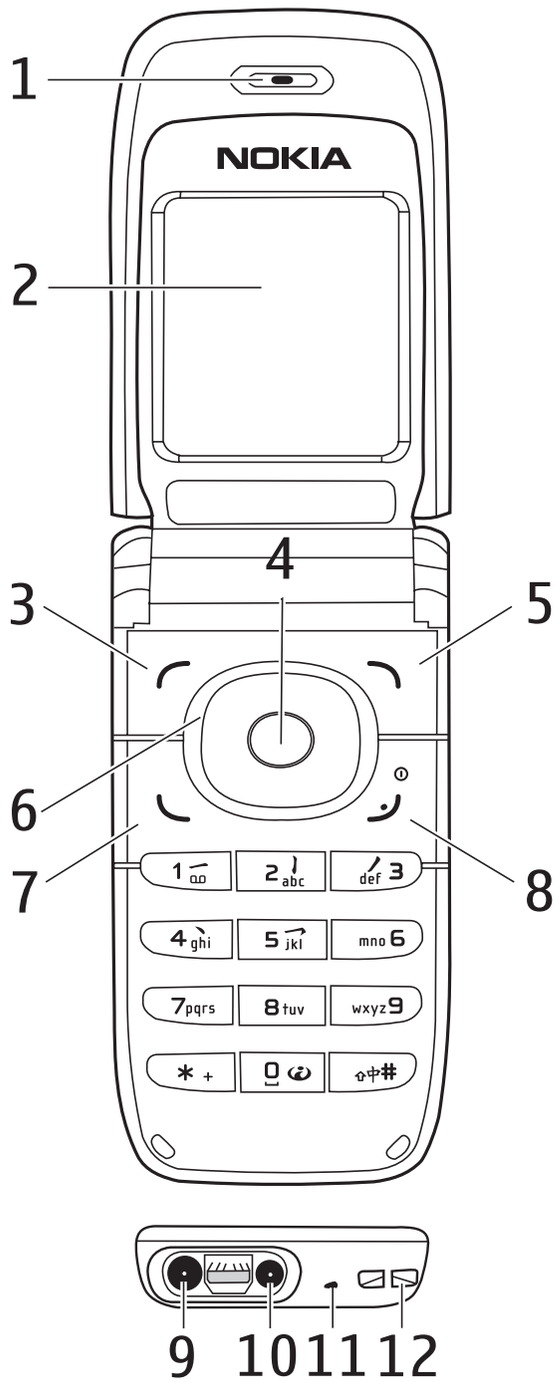

- 喇叭 (13)
- 指示燈 (14)

  當翻蓋關閉時，如果燈光效果已設定爲開，指示燈會向您通報手機的狀態 (例如：來電)。請參閱「燈光」，刊於第 47 頁。

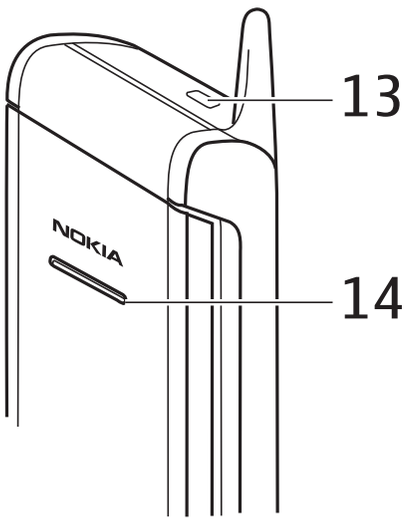

注意：不要觸摸連接器，因其僅適宜獲授權的服務人員使用。

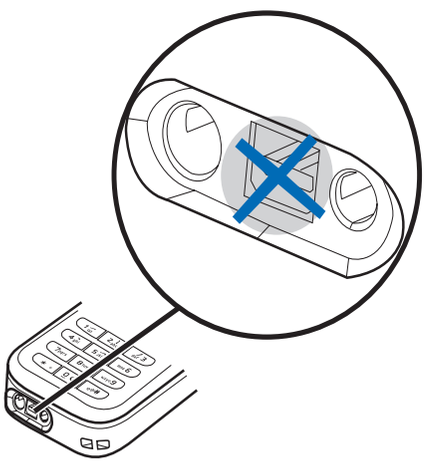

警告：本裝置的某些部件可能包含鎳。避免長時間與皮膚接觸。將皮膚長時間暴露在鎳中可能導致鎳過敏。

待機模式

當手機已準備就緒，又尚未輸入任何字元時，手機便處於待機模式下。

螢幕

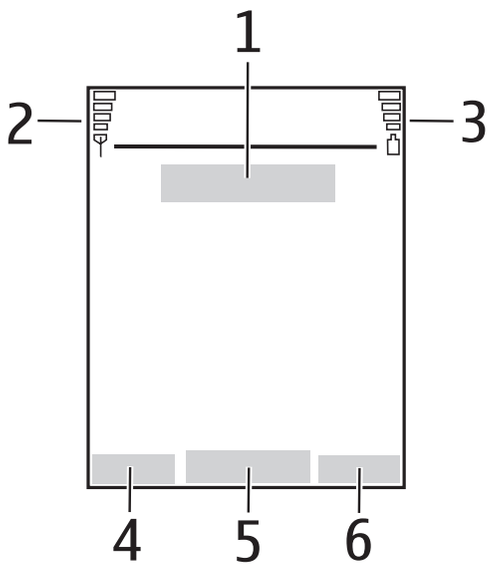

- 網絡名稱或網絡標誌 (1)
- 顯示您目前所處位置流動網絡訊號的強度 (2)
- 電池電量水平 (3)
- 左選擇鍵爲**捷徑** (4)。
- 中間選擇鍵爲**功能表** (5)
- 右選擇鍵爲**名單** (6) 或所選功能的其他快捷操作。請參閱「我的快捷操作」，刊於第 47 頁。不同的網絡商可能擁有網絡商專有的名稱以存取其特定網站。

個人快捷操作列表

左選擇鍵爲**捷徑**。

要查看個人快捷操作列表中的功能，選擇**捷徑**。要啓動某功能，選擇該功能。

要查看可使用功能的列表，選擇**捷徑** > **操作** > 選擇操作。要新增功能至快捷操作列表，選擇**標記**。要從列表中刪除功能，選擇取消。

要重新排列您個人快捷操作列表中的功能，選擇**捷徑** > **操作** > 組織。選擇想要的功能及**移動**，然後選擇您想將其移至的地方。

待機模式下的快捷操作

- 要存取已撥號碼的列表，按通話鍵一次。捲動至您想要的號碼或姓名；然後按通話鍵撥打號碼。
- 要開啓網絡瀏覽器，按住 0。
- 要致電您的留言信箱，按住 1。
- 將導航鍵作爲快捷操作使用。請參閱 「我的快捷操作」，刊於第 47 頁。

省電功能

當手機翻蓋開啓時，如果手機在某段時間內未使用任何功能，螢幕上將顯示數碼時鐘檢視，以作省電之用。要啓動省電功能，請參閱省電螢幕保護，刊於 「螢幕」，第 48 頁。按任意鍵關閉螢幕保護。

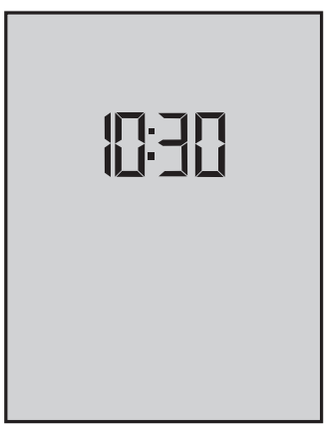

指示符號

您已收到一個或多個文字或圖片訊息。請參閱「閱讀及回覆 SMS 訊息」，刊於第 24 頁。

您已收到一個或多個多媒體訊息。請參閱「閱讀及回覆多媒體訊息」，刊於第 24 頁。

手機記錄一個未接電話。請參閱「通話記錄」，刊於第 37 頁。

鍵盤已鎖定。請參閱「鍵盤鎖 (按鍵保護)」，刊於第 10 頁。

當來電提示及訊息提示聲已設定爲關時，手機在收到來電或接收文字訊息時不會響鈴。請參閱「鈴聲」，刊於第 47 頁。

鬧鐘已設定爲開。請參閱「鬧鐘」，刊於第 56 頁。

當已選擇分組數據連接模式保持連線，並且分組數據服務可以使用時，會顯示指示符號。請參閱「數據連線」，刊於第 51 頁。

已建立一個分組數據連接。請參閱「數據連線」，刊於第 51 頁，以及「瀏覽網頁」，刊於第 66 頁。

分組數據連接會暫停 (保留)，例如：當分組數據撥號連接時，有來電或撥打電話。

■ 鍵盤鎖 (按鍵保護)

要防止按鍵被意外地按下，選擇**功能表**，然後在 1.5 秒內按 * 鎖定鍵盤。

要解除鍵盤鎖，選擇**開鎖**，然後按 *。如果安全鍵盤鎖已設定爲開，輸入保密碼 (如有需要)。

要在鍵盤鎖啓動時接聽電話，按通話鍵。當您結束通話或拒絕來電時，鍵盤會自動鎖定。

如要獲取有關安全鍵盤鎖的資料，請參閱 「手機」，刊於第 50 頁。

當鍵盤鎖定時，仍然可以撥打已編入本裝置內的官方緊急號碼。

3. 通話功能

撥打電話

1. 輸入電話號碼連區號。

   要撥打國際長途電話，按 * 兩次輸入國際長途碼 (+ 符號可代替國際接入號碼)，然後輸入國家和地區代碼 (不包括開頭的 0)，如果需要的話，及電話號碼。

2. 要撥打電話號碼，按通話鍵。

3. 要結束通話或取消試撥，按結束鍵或合上手機翻蓋。

要使用姓名撥打電話，在通訊錄內搜尋姓名或電話號碼。請參閱「在通訊錄中尋找姓名」，刊於第 38 頁。按通話鍵撥打號碼。

要存取您最後撥打或試撥號碼的列表，在待機模式下按一下通話鍵。要撥打號碼，選擇號碼或名稱，然後按通話鍵。

單鍵撥號

設定電話號碼至其中一個單鍵撥號鍵，從 2 至 9。請參閱 「單鍵撥號」，刊於第 44 頁。按以下方式之一撥打該號碼：

- 按單鍵撥號鍵，然後按通話鍵。
- 如果單鍵撥號已設定爲開，按住單鍵撥號鍵，直至開始通話。請參閱 「通話」中的單鍵撥號，刊於第 49 頁。

■ 接聽或拒絕來電

要接聽來電，按通話鍵，或在打開翻蓋時接聽已設定爲開時，打開手機的翻蓋，請參閱「通話」，刊於第 49 頁。要結束通話，按結束鍵，或合上手機翻蓋。

要拒絕來電，按結束鍵，或如果手機翻蓋已打開，則合上手機翻蓋。要在手機翻蓋已合上時拒絕來電，打開手機翻蓋，然後按結束鍵。

秘訣：如果已啓動通話中轉接來電功能轉接來電 (例如：至您的留言信箱) 拒絕來電亦會轉接來電。請參閱「通話」，刊於第 49 頁。

如果手機連接了隨耳機鍵提供的兼容耳機，按耳機鍵接聽及結束通話。

來電等待

要在當前通話期間接聽等待的電話，按通話鍵。第一個電話會保留。要結束當前通話，按結束鍵。

要啓動來電等待功能，請參閱「通話」，刊於第 49 頁。

■ 在通話期間的選項

在通話期間所能使用的選項，大部份都屬於網絡服務。如要獲取有關供應的資料，請與您的網絡商或服務供應商聯絡。

在通話期間，選擇**操作**並選擇以下選項：

通話選項爲靜音或取消靜音、通訊錄、功能表、鎖鍵盤、喇叭或手機。

網絡服務選項爲接聽及拒絕、保留或恢復通話、接通另一方、加入會議通話、掛斷、結束全部通話及以下選項：

發送多頻音 — 發送語音字串 (DTMF)

切換通話 — 在當前的通話和保留的通話中轉換。

轉移通話 — 連接保留通話至當前通話並自行中斷

會議通話 — 撥打會議通話，可允許六個人同時參與

單方通話 — 在會議通話中可秘密交談

警告：當喇叭正在使用時，請不要把裝置靠近您的耳朵，因爲音量可能非常響亮。

4. 輸入法

手機中可用的輸入法是根據手機銷售市場預先設置的。

當書寫語言已設定爲繁體中文時，您可以使用筆劃輸入法輸入繁體中文字元。當書寫語言已設定爲簡體中文時，您可以使用拼音或筆劃輸入法輸入簡體中文字元。

■ 選擇編寫語言

要選擇您想要用來編寫文字的語言，選擇**操作**，或按住 #，選擇書寫語言，然後選擇您想要的語言。

■ 輸入法指示符號

輸入法指示符號顯示於螢幕的左上角。以下將顯示螢幕上的輸入法名稱及對應的指示符號。

拼音	
筆劃	
大寫字母	
小寫字母	
數字輸入	

請注意不是所有的輸入法都可以在任何情況下使用。請經常查看指示符號，獲知使用的是哪一種輸入法。

在輸入法之間互相切換

您可以通過以下方法在可用的輸入法之間切換：

- 重複按 #，直到您想要輸入法的指示符號顯示於螢幕的左上角；
- 按住 # 開啓包括用於輸入的數字輸入模式及其他選項的選項列表。
- 在編寫訊息時，選擇**操作**，然後從選項列表中選擇想要的輸入法。

筆劃輸入法

組成中文字的筆劃可分爲五種：橫、豎、撇、點及勾。每種筆劃分別對應一個從 1 至 5 的數字鍵。

按鍵	1	2	3	4	5
基本筆劃	一	丨	丿	丶	乛

筆劃根據下表分類：

數字鍵	基本筆劃	筆劃變形舉例	例字	說明
1	橫 一	一 ㇀ ㇀	十、慧 七、冰、駿 羽、輸、泰	提 (㇀) 歸爲橫 基本運筆方向：左 → 右
2	豎 丨	丨 亅	十 了、小、利	豎鉤 (亅) 歸爲豎 基本運筆方向：上 → 下
3	撇 丿	丿	人、川、牛 小、常	基本運筆方向：上 → 左下 (注意撇與提的區別)
4	點 丶	丶 丶	主 心、家 入、邊	捺 (㇏) 歸爲點 基本運筆方向： 左上 → 右下 (注意左點也包括在內)
5	折 乛	乙 乛 ㇕ 𠃌 ㇋ ㇉ ㇊ ㇈ ㇄ ㇈ ㇇ ㇙ ㇜ ㇛ ㇁ ㇂ ㇃	億 買、安 口、習、內 除、建 與、鳥 語、凹 兒、飛 各 以、飯 能、雲、好 獨 代、心	包含各種帶轉折的筆劃 (注意左豎鉤除外)

使用筆劃輸入法

1. 輸入筆劃：根據標準的筆劃順序，按數字鍵輸入筆劃。將顯示與輸入筆劃對應的候選中文字元及部首 (由點劃線表示，僅當書寫語言設定爲繁體中文時可用)。

   選擇**清除**可刪除游標左方的筆劃。選擇並按住**清除**刪除所有輸入的筆劃。

   如果您不清楚是甚麼筆劃，或不知道筆劃的種類，按 6 作爲該筆劃的替代，然後繼續輸入其他筆劃。輸入筆劃的位置會出現問號代表該筆劃。

2. 在候選字元中捲動以選擇想要的中文字元，然後選擇**確認**。

   如果已選擇部首，其將取代您已輸入的筆劃串，然後開啓一個包括此部首的新候選字列表。您可以從這個新列表中選擇或繼續輸入更多筆劃。

   並不限制可輸入的筆劃數目。輸入的筆劃越多，候選字列表就越短。

3. 如果沒有輸入筆劃，選擇**清除**刪除游標左邊的中文字元，選擇並按住**清除** 可加快刪除輸入的中文字元。

■ 拼音輸入法

拼音符號印於數字鍵上。不用考慮符號在數字鍵上的位置，您僅需按鍵一次，手機將進行拼音符號的邏輯組合。

輸入字元

1. 按數字鍵一次輸入您想要輸入的每個拼音符號 (使用 「v 」輸入 「ü 」)；
2. 按 1 一次輸入第一聲，兩次輸入第二聲，餘此類推。按 1 五次輸入輕聲調。

   選擇**清除**刪除游標左邊的拼音符號 (或聲調標記)。選擇並按住**清除**刪除所有輸入的拼音符號和聲調標記。
3. 按 * 獲取下一個可能的拼音組合。按住導航鍵在候選中文字元之間捲動，然後選擇**確認**選擇正確的中文字元。
4. 如果沒有輸入拼音符號，選擇**清除**刪除游標左邊的中文字元，選擇並按住**清除** 可加快刪除輸入的中文字元。使用導航鍵移動游標。

■ 字元智慧輸入法

手機可預測後續中文字元 (如果這些字元可以與您已輸入的最後一個中文字元構成合理的短語)。從候選字中選擇您想要的一個。手機可根據您已選定的字元持續預測後續字元。如果不需要預測，選擇**返回**結束預測；或您可以開始輸入下一個中文字元；或按 * 輸入符號或標點符號。

■ 重複輸入

如果您已結束輸入並且手機正處於筆劃或拼音輸入模式下，您可以按住 * 重複輸入游標左邊的任何字元。

■ 使用傳統英文輸入法

重複按數字鍵，1 至 9，直至出現想要的字元。

並不是所有可按數字鍵獲得的字元都印於數字鍵上。可用的字元視乎選擇的書寫語言而定，請參閱「選擇編寫語言」，刊於第 14 頁。

- 如果您要輸入的下一個字母所在按鍵與現用的按鍵相同，請等候游標出現，或按任意導航鍵，然後輸入字母。
- 最常用的標點符號和特殊字元可按數字鍵 1 獲得。

如要獲取更多有關輸入文字的指引，請參閱「輸入文字的秘訣」，刊於第 20 頁。

■ 開啟或關閉智慧預測型英文輸入法

當輸入文字的書寫語言已設定爲英文時，選擇並按住 #，然後選擇啓動預想字典或關閉預想字典設定預測智慧型英文開啓或關閉。

■ 使用智慧預測型英文輸入法

您僅需按鍵一次便可輸入任何字母。智慧預測型英文輸入法所使用的是內置辭典，您也可以加入新的詞彙。

1. 使用從 2 至 9 鍵開始輸入文字。每個字母只需按一次鍵。螢幕顯示的字都會隨每次按鍵變化。

   例如：要在選擇英文字典時輸入 Nokia，按 6、6、5、4 及 2。

要在字母模式下插入數字，按住要輸入的數字鍵。

如要獲得更多有關輸入文字的指引，請參閱「輸入文字的秘訣」，刊於第 20 頁。

2. 正確寫完該單字後，透過使用 0 加上空格，或按任何導航鍵以確認它。

   如果單字不正確，

   重複按 * 或選擇**操作** > 其他對應項。當出現您想要的字時，加以確認。

   如果在該單詞之後顯示 “？”，代表字典中沒有該單詞。要把該字加到字典中，選擇**拼寫**，輸入該字 (使用的是傳統英文輸入法)，然後按**儲存**。當字典已滿時，新的單字將取代最先加入的單字。

3. 開始輸入下一個字。

輸入組合詞彙

輸入該字的第一部分，並按右鍵確認。輸入該字的最後一部分，然後確認。

■ 輸入文字的秘訣

以下功能亦可用於輸入文字：

- 要在沒有顯示輸入法符號時插入數字，按住想要的數字鍵。
- 要在沒有顯示候選字或智慧輸入法列表時插入空格，按 0。

- 要向左、向右、向下或向上移動游標，分別按左導航鍵、右導航鍵、下導航鍵或上導航鍵。
- 要刪除游標左方的字元，按**清除**。按住**清除**可加快刪除字元。

  要在編寫訊息時一次過刪除所有字元，按**操作**，然後選擇清除文字。
- 要在使用智慧預測型英文輸入法時插入單字，按**操作**，然後選擇插入單字。用傳統英文輸入法寫入單字並按**儲存**。單字同樣也可以加到辭典內。
- 當使用傳統英文輸入法或中文輸入法時，按 * 開啓特殊字元的列表。當使用預測智慧型英文輸入法時，按住 * 開啓特殊字元的列表。

  當您的手機螢幕顯示特殊字元的列表時，您可以按 * 開啓表情符號的列表。或當正在輸入文字時，按**操作**，然後選擇插入表情符號開啓表情符號的列表。

  按任何導航鍵捲動至某個字元或表情符號，然後按**確定**選擇該字元或表情符號。

  您亦可以按 2、4、6 或 8 捲動至字元，然後按 5 選擇字元。

5. 瀏覽功能表

手機提供各式各樣的功能，這些功能按功能表分組。

1. 要存取功能表，選擇**功能表**。要更改功能表檢視，選擇**操作** > 主功能表格式 > 清單或圖示。
2. 在功能表中捲動，然後選擇子功能表 (例如：設定)。
3. 如果功能表包括子功能表，選擇您想要的 (例如：通話)。
4. 如果選擇的功能表包括進一步的子功能表，選擇您想要的 (例如：任何鍵接聽)。
5. 選擇想要的設定。
6. 要返回至上一級功能表，選擇**返回**。要退出功能表，選擇退出。

6. 訊息

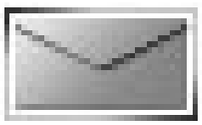

訊息服務僅在網絡商或服務供應商支援時才能使用。

注意：當發送訊息時，手機會顯示訊息已發出的字樣。這表示裝置已將訊息發送至本裝置中所編入的訊息中心號碼。但並不表示收件人已經收到訊息。如要獲取更多有關訊息服務的詳細資料，請向您的服務供應商查詢。

重要資料：開啓訊息時務必小心。訊息可能包含惡意軟件或其他對您的裝置或個人電腦造成損害的內容。

僅具備兼容功能的裝置可以接收及顯示訊息。訊息的顯示可能視乎接收的裝置而有所不同。

文字訊息 (SMS)

透過文字訊息服務 (SMS)，您可以發送及接收由多個包含圖片的普通文字訊息組成的多段訊息 (網絡服務)。

在您可以發送任何文字、圖片及電郵訊息前，您需要儲存訊息中心號碼。請參閱「訊息設定」，刊於第 34 頁。

要查詢可用的 SMS 電郵服務及要申請此服務，請與您的服務供應商聯絡。

本裝置支援發送字元數超過單個訊息字元限制的文字訊息。較長的訊息將會以一系列的兩個或多個訊息發送。您的服務供應商可能會相應收取費用。使用重音符號或其他標記符號的字元及部份語言選項 (如中文) 中的字元會佔用更多的空間，因而會限制可以在一個短訊中傳送的字元數。

在螢幕頂部，您可以看到訊息長度指示符號，計算還可輸入的字元數。例如：10/2 表示您還可以增加 10 個字元，文字將分爲兩個訊息發送。

編寫及發送 SMS 訊息

1. 選擇**功能表** > 訊息 > 建立訊息 > 文字訊息。
2. 輸入訊息。請參閱「輸入法」，刊於第 14 頁。要在訊息中插入文字範本或圖片，請參閱「範本」，刊於第 25 頁。每個圖片訊息由多個文字訊息組成。發送一個圖片或多段訊息比發送一個文字訊息需要更多費用。
3. 要發送訊息，選擇**發送** > 最近使用名單、至電話號碼、至多人，或至電子郵件地址。要使用預定義的訊息操作模式發送訊息，選擇經訊息設定組。如要獲取有關訊息操作模式的資料，請參閱「文字及 SMS 電郵」，刊於第 34 頁。選擇或輸入電話號碼或電郵地址，或選擇操作模式。

注意：圖片訊息功能僅在您的網絡商或服務供應商支援時才能使用。僅擁有圖片訊息功能的兼容裝置可以接收及顯示圖片訊息。訊息的顯示可能視乎接收的裝置而有所不同。

閱讀及回覆 SMS 訊息

當您已收到 SMS 訊息或 SMS 電郵時，會顯示 ✉。當出現閃動 ✉ 時表示訊息記憶體已滿。在您可以接收新訊息前，您需要在收件匣資料夾中刪除一些舊訊息。

1. 要查看新訊息，選擇**顯示**。要稍後查看訊息，選擇**退出**。

要稍後閱讀訊息，選擇**功能表** > 訊息 > 收件匣。如果已收到多個訊息，選擇您想要閱讀的訊息。 表示未閱讀的訊息。

2. 在閱讀訊息時，選擇**操作**，然後刪除或轉發訊息；編輯訊息爲文字訊息或 SMS 電郵；重新命名您正在閱讀的訊息或將訊息移動至其他資料夾；或查看或擷取訊息詳細資料。您亦可以從訊息開頭複製文字至您手機的日曆作爲備忘錄備註。要在閱讀圖片訊息時儲存圖片至範本資料夾中，選擇**操作** > 儲存圖片。
3. 要以訊息形式回覆，選擇**回覆** > 文字訊息、多媒體訊息或快顯訊息。輸入回覆訊息。回覆電郵時，先確認或編輯電郵地址和主題。
4. 要發送訊息至顯示的號碼，選擇**發送** > **確認**。

範本

您的手機備有文字範本 及圖片範本 ，您可以在文字、圖片或 SMS 電郵訊息中使用。

要存取範本列表，選擇**功能表** > 訊息 > 已存資料 > 文字訊息 > 範本。

■ 多媒體訊息 (MMS)

多媒體訊息可以包含文字、圖片、日曆備註或名片。如果訊息太大，手機可能無法接受該訊息。一些網絡允許文字訊息包括互聯網地址，您可以在此互聯網地址查看多媒體訊息。

注意：僅擁有兼容功能的裝置才能接收及顯示多媒體訊息。訊息的顯示可能視乎接收的裝置而有所不同。

當在通話、遊戲、其他 Java 應用程式期間或有正在進行的瀏覽過程時，您不能接收多媒體訊息。由於多媒體訊息的發送可能因爲多種原因導致失敗，因此對於重要通訊不要僅僅依賴它。

編寫及發送多媒體訊息

要設定多媒體訊息需要的設定，請參閱「多媒體」，刊於第 34 頁。要檢查可用的多媒體訊息服務及申請此項服務，請與您的服務供應商聯絡。

1. 選擇**功能表** > 訊息 > 建立訊息 > 多媒體訊息。
2. 輸入訊息。請參閱「輸入法」，刊於第 14 頁。

   要插入檔案，選擇**操作** > 插入及以下選項：

   圖像 — 從多媒體資料中插入檔案；

   聲音片段 — 從多媒體資料中插入聲音檔案；

   名片或日曆備註 — 在訊息中插入名片或日曆備註。

   投影片 — 插入投影片至訊息。您的手機支援包括多頁 (投影片) 的多媒體訊息。每張投影片可以包括文字、一個圖像、一個日曆備註及一張名片。如果訊息包含多張投影片，選擇**操作** > 上一張投影片、下一張投影片或投影片列表開啓想要的投影片。要設定投影片之間的間隔，選擇**操作** > 投影片計時。要把文字部份移至訊息的開頭或結尾，選擇**操作** > 文字顯示於頂端或文字顯示於底端。

   以下選項可能可以使用：刪除刪除訊息中的圖像或投影片，清除文字、預覽或儲存訊息。在更多選項中，以下選項可能可以使用：插入姓名、插入號碼、訊息詳情及修改主題。

3. 要發送訊息，選擇**發送** > 最近使用名單、至電話號碼、至電子郵件地址或至多人。
4. 從列表中選擇聯絡人，或輸入收訊人電話號碼或電郵地址，或在通訊錄中尋找。選擇**確認**。訊息已移至寄件匣資料夾準備發送。

   多媒體訊息發送後，將顯示動畫圖示，您可以使用手機的其他功能。如果發送失敗，手機將嘗試重新發送訊息數次。如果發送失敗，訊息便保留在寄件匣資料夾中，您可稍後嘗試重新發送。

   如果您選擇儲存已發訊息 > 是，發送的訊息會儲存於寄件備份資料夾中。請參閱「多媒體」，刊於第 34 頁。當訊息已發送時，並不表示收件人已經收到訊息。

版權保護可以防止一些圖像、鈴聲和其他內容被複製、修改、傳送或轉發。

閱讀及回覆多媒體訊息

多媒體訊息服務的預設設定一般爲開啓。

重要資料：開啓訊息時務必小心。多媒體訊息物件可能包含惡意軟件或其他對您的裝置或個人電腦造成損害的內容。

當手機接收多媒體訊息時，會顯示動畫。訊息接收完畢時，會顯示 及文字收到多媒體訊息。

1. 要閱讀訊息，選擇**顯示**。要稍後查看訊息，選擇**退出**。

要稍後閱讀訊息，選擇**功能表** > 訊息 > 收件匣。在訊息列表中，✉ 表示未閱讀的訊息。選擇您想要查看的訊息。

2. 中間選擇鍵的功能視乎訊息中當前顯示的附件而有所改變。

   如果接收的訊息包含簡報，選擇**播放**查看整個訊息。

   要放大圖像，選擇**放大**。要查看名片、日曆備註或要打開佈景物件，選擇**打開**。

3. 要回覆訊息，選擇**操作** > 回覆 > 文字訊息、多媒體訊息或快顯訊息。輸入回覆訊息，然後選擇**發送**。您可以僅發送回覆訊息至發送訊息給您的人。

   選擇**操作**存取可用的選項：

無線網絡可能會限制 MMS 訊息的大小。如果插入的圖片大小超過此限制，裝置可能會縮小圖片以便透過 MMS 進行傳送。

■ 記憶體已滿

當您收到一個文字訊息，並且訊息記憶體已滿時，✉ 閃爍且文字訊息記憶體已滿，請刪除訊息。會顯示。選擇**取消**，然後從資料夾中刪除一些訊息。要放棄等候的訊息，選擇**退出** > **確認**。

當您有新的多媒體訊息正在等候，而訊息的記憶體已滿時，✉ 閃爍，並且會顯示多媒體記憶體已滿。顯示等待的訊息。會顯示。要查看等待的訊息，選擇**顯示**。在您儲存等待訊息前，刪除舊的訊息以釋放記憶體空間。要儲存訊息，選擇**操作** > 訊息儲存中。

要放棄等候的訊息，選擇**退出** > **確認**。如果您選擇**取消**，您可以查看訊息。

資料夾

手機儲存接收的文字及多媒體訊息至收件匣資料夾中。

未發送的多媒體訊息被移動至寄件匣資料夾中。

如果您已選擇訊息設定 > 文字訊息 > 儲存發出的訊息 > 是及訊息設定 > 多媒體訊息 > 儲存已發訊息 > 是，發送的訊息會儲存於寄件備份資料夾中。

要儲存您已編寫並想要稍後發送的文字訊息至已存資料資料夾中，選擇操作 > 儲存訊息 > 已存文字訊息。對於多媒體訊息，選擇**操作** > 儲存訊息。 表示未發送的訊息。

要組織您的文字訊息，您可以移動一部分訊息至我的資料夾中，或爲您的訊息新增資料夾。選擇訊息 > 已存資料 > 文字訊息 > 我的資料夾。

要新增資料夾，選擇**操作** > 新增資料夾。如果您還沒有儲存任何資料夾，選擇**新增**。

要刪除或重新命名資料夾，捲動至想要的資料夾，然後選擇**操作** > 刪除資料夾或重新命名資料夾。

■ 快顯訊息

快顯訊息是可以立即顯示給收訊人的文字訊息。

編寫快顯訊息

選擇**功能表** > 訊息 > 建立訊息 > 快顯訊息。編寫您的訊息。快顯訊息的最大長度爲 70 個字元。要在快顯訊息中插入閃爍文字，從選項列表中選擇插入閃爍字元設定標記。標記之後的文字將持續閃爍直至插入第二個標記。

接收快顯訊息

收到的快顯訊息不能自動儲存。要閱讀訊息，按**閱讀**。要從當前訊息中提取電話號碼、電郵地址、用戶識別碼和 Web 網站地址，選擇**操作** > 提取詳情。要儲存此訊息，按**儲存**，然後選擇您想要儲存該訊息的資料夾。

■ 電郵應用程式

電郵應用程式 (網絡服務) 讓您可以從手機存取您的電郵帳號，即使您不在辦公室或家中。電郵應用程式有別於 SMS 及 MMS 電郵功能。

您的手機支援 POP3 和 IMAP4 電郵伺服器。在您可以發送及擷取任何電郵前，您需要執行以下操作：

- 獲得一個新電郵帳號或使用當前這個。如要獲取有關電郵帳號供應的資料，請與您的電郵服務供應商聯絡。

- 如要獲取有關電郵所需設定的資料，請與您的電郵服務供應商聯絡。您可以配置訊息的形式接收電郵配置設定。請參閱「配置設定服務」，刊於第 xii 頁。您亦可手動輸入設定。請參閱「配置」，刊於第 52 頁。

  要啓動電郵設定，選擇**功能表** > 訊息 > 訊息設定 > 電子郵件訊息。請參閱「電郵」，刊於第 35 頁。

編寫及發送電郵

1. 選擇**功能表** > 訊息 > 電子郵件 > 建立電子郵件。
2. 輸入收件人的電郵地址、主題及電郵訊息。

   要附加檔案至電郵，選擇**操作** > 附加，然後在多媒體資料中選擇檔案。
3. 選擇發送 > 立即發送。

下載電郵

1. 要存取電郵應用程式，選擇**功能表** > 訊息 > 電子郵件。
2. 要下載已發送至您電郵帳號的電郵訊息，選擇提取。

   要下載新電郵訊息及要發送已儲存於寄件匣資料夾中的電郵，選擇**操作** > 提取並發送。

   要先下載已發送至您電郵帳號的新電郵訊息的標題，選擇**操作** > 檢查新電子郵件。然後，要下載選擇的電郵，標記您想要的那幾個，然後選擇操作 > 提取。
3. 選擇收件匣中的新訊息。要稍後查看，選擇**返回**。 表示未閱讀的訊息。

閱讀及回覆電郵

重要資料：開啓訊息時務必小心。電郵訊息可能包含惡意軟件或其他對您的裝置或個人電腦造成損害的內容。

選擇**功能表** > 訊息 > 電子郵件 > 收件匣及想要的訊息。在閱讀訊息時，選擇**操作**查看可使用的選項。

要回覆電郵，選擇**回覆** > 空白螢幕或原訊息。要回覆至多人，選擇**操作** > 全部回覆。先確認或編輯電郵地址和主題；然後編寫回覆。要發送訊息，選擇**發送** > 立即發送。

收件夾和其他資料夾

手機儲存您從電郵帳號下載的電郵至收件匣資料夾中。其他資料夾包括以下資料夾：草稿用於儲存未完成的電郵；永久信箱用於組織及儲存您的電郵；寄件匣用於儲存未發送的電郵；及寄件備份用於儲存已發送的電郵。

要管理資料夾及其電郵內容，選擇**操作** > 管理資料夾。

刪除電郵訊息

選擇**功能表** > 訊息 > 電子郵件 > **操作** > 管理資料夾及想要的資料夾。標記您想要刪除的訊息。要刪除訊息，選擇**操作** > 刪除。

從您的手機刪除電郵並不代表已從電郵伺服器刪除。要設定手機刪除電郵伺服器上的電郵，選擇功能表 > 訊息 > 電子郵件 > **操作** > 附加設定 > 保留複本： > 刪除已提取訊息。

留言訊息

留言信箱是一項網絡服務，您必須先申請此項服務。如要獲取詳細資料，請與您的服務供應商聯絡。

要致電您的留言信箱，選擇**功能表** > 訊息 > 留言訊息 > 接聽留言訊息。要輸入、尋找或編輯您的留言信箱號碼，選擇留言信箱號碼。

如果網絡支援，表示有新的留言訊息。選擇**接聽**致電留言信箱號碼。

廣播訊息

選擇**功能表** > 訊息 > 廣播訊息。透過廣播訊息網絡服務，您可以從服務供應商處接收各種主題訊息。要查詢有關供應、主題及相關主題號碼的資料，請與您的服務供應商聯絡。

服務指令

選擇**功能表** > 訊息 > 系統指令編輯器。編寫及發送服務要求 (亦稱爲 USSD 指令) 至您的服務供應商，例如：網絡服務的啓動指令。

刪除訊息

要刪除資料夾中的所有訊息，選擇**功能表** > 訊息 > 刪除訊息及您想要刪除訊息的資料夾。選擇確認，如果資料夾包含未讀訊息，手機會詢問您是否也要刪除這些訊息。再次選擇確認。

■ 訊息設定

文字及 SMS 電郵

訊息設定影響訊息的發送、接收和檢視。

選擇**功能表** > 訊息 > 訊息設定 > 文字訊息及以下選項：

訊息設定組 — 如果您的 SIM 卡支援多個訊息操作模式設定，選擇您想要更改的設定。

以下選項可能可以使用：訊息中心號碼 (由您的服務供應商發送)、發送格式、訊息有效期、預設收訊號碼 (文字訊息) 或 電子郵件伺服器 (電郵)、訊息報告、使用分組數據、本中心回覆 (網絡服務) 及重新命名訊息設定組。

儲存發出的訊息 > 是 — 設定手機儲存已發送的文字訊息至寄件備份資料夾。

自動重新發送 > 開 — 如果發送失敗，手機會自動嘗試重發文字訊息。

多媒體

訊息設定影響多媒體訊息的發送、接收和檢視。

選擇**功能表** > 訊息 > 訊息設定 > 多媒體訊息及以下選項：

儲存已發訊息 > 是 — 設定手機儲存已發送的多媒體訊息至寄件備份資料夾

訊息報告 — 要求網絡對您的訊息發送訊息報告 (網絡服務)

縮小圖像 — 定義當您插入圖像至多媒體訊息時的圖像大小

預設投影片計時 — 定義多媒體訊息中投影片之間的預設時間

允許多媒體接收 > 是或否 — 接收或封鎖多媒體訊息。如果您選擇在註冊網絡，您無法在註冊網絡以外接收多媒體訊息。

收到的多媒體訊息 > 提取、手動提取或拒絕 — 允許自動接收多媒體訊息、在提示後手動接收或拒絕接收

配置設定 > 配置 — 僅顯示支援多媒體訊息的配置。選擇服務供應商、多媒體訊息的預設或個人配置。選擇帳號及在啓動的配置設定中包含的多媒體訊息服務帳號。

允許接收廣告 — 接收或拒絕廣告。如果允許多媒體接收設定爲否，此設定便不會顯示。

電郵

此設定影響電郵的發送、接收和檢視。

您可以配置訊息的形式接收電郵應用程式的配置設定。請參閱「配置設定服務」，刊於第 xiii 頁。您亦可手動輸入設定。請參閱「配置」，刊於第 52 頁。

要啓動電郵應用程式的設定，選擇**功能表** > 訊息 > 訊息設定 > 電子郵件訊息及以下選項：

配置 — 選擇您想要啓動的設定。

帳號 — 選擇服務供應商提供的帳號。

我的名稱 — 輸入您的姓名或暱稱。

電子郵件地址 — 輸入電郵地址。

包括簽名 — 您可以定義當您編寫訊息時自動添加至電郵結尾的簽名。

回覆地址 — 輸入您想發送回覆的電郵地址。

SMTP 用戶名稱 — 輸入您想外寄郵件使用的姓名。

SMTP 密碼 — 輸入您想外寄郵件使用的密碼。

內送郵件伺服器類型 — 選擇 POP3 或 IMAP4，視乎您正在使用的電郵系統的類型而定。如果兩個類型都支援，選擇 IMAP4。

接收郵件設定 — 爲 POP3 或 IMAP4 選擇可用的選項。

其他設定

要爲訊息選擇其他設定，選擇**功能表** > 訊息 > 訊息設定 > 其他設定。要更改閱讀及編寫訊息的字體大小，選擇字體大小。要用圖像表情符號取代基於字元的表情符號，選擇圖像表情符號 > 是。

■ 訊息計數器

選擇**功能表** > 訊息 > 訊息計數器獲取有關您最近通訊的大概資料。

7. 通話記錄

手機會記錄已識別的未接來電、已接來電、已撥電話、訊息收件人及大約的通話時間。

僅當手機已開機，並且處於系統的服務範圍之內並且系統支援以上功能時，手機才會記錄。

■ 最近通話列表

當您在未接來電、已接來電、已撥電話或訊息收訊人功能表中選擇**操作**時，您可以查看通話的時間；編輯、查看或撥打記錄的電話號碼；新增號碼至記憶體；或從列表中刪除號碼。您亦可以發送文字訊息。要刪除最近通話列表，選擇刪除最近通話記錄。

■ 計數器及計時器

注意：您的服務供應商對通話和服務所列出的實際發票可能會不同，這視乎網絡功能、開單時數目的四捨五入、稅項等等因素而定。

在服務或軟件升級時，一些計時器 (包括總計時器) 可能會被重設。

選擇**功能表** > 通話記錄 > 通話計時、分組數據計數器或分組數據連接計時器獲取您最近通訊的大概資料。

8. 通訊錄

您可以儲存姓名和電話號碼 (通訊錄) 至手機的記憶體及 SIM 卡的記憶體。

手機記憶體可以儲存附有電話號碼及文字項目的聯絡人。您也可以爲一定數目的姓名儲存圖像。

儲存在 SIM 卡的姓名與電話號碼以 表示。

■ 在通訊錄中尋找姓名

使用尋找指令尋找

1. 在待機模式下，選擇**功能表** > 通訊錄 > 姓名 > **操作** > 尋找；或者，(如果可用) 在待機模式下，選擇**名單** > **操作** > 尋找。
2. 輸入您想要尋找的姓名的第一個字元或字母，然後選擇**尋找**。

使用 pop-up 視窗尋找

1. 在待機模式下，按下導航鍵，接著第一個姓名 (或號碼) 被突出顯示；或者，(如果可用) 在待機模式下，選擇**名單** > **操作** > 快速尋找。
2. 輸入您正要尋找姓名的第一個輸入法符號。輸入法符號在 pop-up 視窗中顯示。視乎您的需要，您可以在 pop-up 視窗中輸入更多的符號。相應的姓名會顯示出來。

   請注意列出姓名的次序可能與姓名中的不同。

當輸入法符號使用尋找指令尋找姓名時，或者當 pop-up 視窗顯示時，您可以按 # 更改輸入法。

儲存姓名及電話號碼

姓名及電話號碼儲存於使用的記憶體中。選擇**功能表** > 通訊錄 > 姓名 > **操作** > 新增姓名。輸入姓名及電話號碼。

儲存電話號碼、項目或圖像

在用於儲存聯絡人的手機記憶體中，您可爲每個姓名儲存不同類型的電話號碼及短文字項目。

您儲存的第一個電話號碼會自動設定爲預設號碼。以一個包圍該號碼類型圖示的方框表示 (例如，☎)。當您選擇姓名時 (例如：要撥打的電話)，除非選擇了另一個號碼，否則會使用預設號碼。

1. 確定使用的記憶體是手機還是手機和 SIM 卡。
2. 捲動至您想要新增電話號碼或文字項目的姓名，然後選擇**詳情** > **操作** > 新增詳情。
3. 要新增電話號碼，選擇號碼及電話號碼類型。

   要增加其他詳細資料，選擇文字類型，或多媒體資料中的圖像。

   如果您已連接至動態顯示服務，選擇用戶識別碼 > 尋找從您服務供應商的伺服器尋找識別碼。請參閱 「我的動態顯示」，刊於第 41 頁。如果僅找到一個識別碼，此識別碼會自動儲存。否則，要儲存識別碼，選擇**操作** > 儲存。要輸入識別碼，選擇手動輸入識別碼。

要更改電話號碼類型，捲動至想要的電話號碼，然後選擇**操作** > 更改類型。要設定選擇的號碼爲預設號碼，選擇設定爲預設號碼。

4. 輸入電話號碼及文字項目；要儲存，選擇**確認**。
5. 要返回至待機模式，選擇**返回** > **退出**。

複製聯絡人

尋找您想要複製的聯絡人，然後選擇**操作** > 複製。您可以從手機聯絡人記憶體複製姓名及電話號碼至 SIM 卡記憶體，反之亦然。SIM 卡記憶體可以儲存附有一個電話號碼的姓名。

編輯聯絡人詳情

1. 尋找您想要編輯的聯絡人，選擇**詳情**，然後捲動至想要的姓名、電話號碼、文字項目或圖像。
2. 要編輯姓名、電話號碼或文字項目，或要更改圖像，選擇**操作** > 修改姓名、修改號碼、修改詳情或更改圖像。

   當識別碼位於 IM 聯絡人或已申請的名單列表中時，您不能編輯此識別碼。

刪除聯絡人或聯絡人詳情

要刪除手機或 SIM 卡記憶體中的所有聯絡人及所附詳細資料，選擇**功能表** > 通訊錄 > 刪除全部姓名 > 從手機記憶體或從 SIM 卡。使用保密碼確認。

要刪除聯絡人，尋找想要的聯絡人，然後選擇**操作** > 刪除聯絡人。

要刪除附於聯絡人的電話號碼、文字項目或圖像，尋找聯絡人，然後選擇**詳情**。捲動至想要的詳細資料，然後選擇**操作** > 刪除 > 刪除號碼、刪除詳情或刪除圖像。在通訊錄中刪除圖片並不會從多媒體資料中刪除。

■ 名片

您可以名片形式從支援 vCard 標準的兼容裝置發送及接收個人的聯絡信息。

要發送名片，尋找您想要發送其資料的聯絡人，然後選擇**詳情** > **操作** > 發送名片 > 經多媒體發送或經短訊息發送。

當您已接收名片時，選擇**顯示** > **儲存**儲存名片至手機的記憶體中。要放棄名片，選擇**退出** > **確認**。

■ 我的動態顯示

通過動態顯示服務 (網絡服務)，您可以與其他配備兼容裝置並已存取此服務的用戶分享您的動態顯示狀態。動態顯示狀態包括您的顯示狀態、狀態訊息和個人圖案。其他已存取服務及請求您資料的用戶也可以看到您的狀態。需要的資料顯示於查看者的通訊錄功能表內的已申請的名單中。您可以個人化您想與其他人分享的資料及控制誰可以看到您的狀態。

在您可以使用動態顯示前，您需要申請此項服務。要查看有關供應、價格的資料及要申請服務，請與您的網絡商或服務供應商聯

絡，您亦可從他們那裡獲得您獨一無二的 ID、密碼及服務的設定。請參閱「配置」，刊於第 52 頁。

當您已連接至動態顯示服務時，您仍可以使用手機的其他功能；動態顯示服務在背景中運行。如果您中斷與服務的連接，您的動態顯示狀態仍會向查看者顯示一段時間，視乎服務供應商而定。

選擇**功能表** > 通訊錄 > 我的動態顯示及以下選項：

連接至「我的動態顯示」服務或中斷服務連接 — 連接至服務或中斷與服務的連接

顯示我的動態顯示 — 查看在私人動態顯示及公共動態顯示中的狀態

編輯我的動態顯示 — 可更改您的動態顯示狀態。選擇我的動態資料、我的顯示訊息、我的顯示圖案或顯示給。

我的查看者 > 當前查看者、私人名單或封鎖列表

設定 > 待機時顯示當前動態顯示資料、與操作模式同步處理、連接類型或動態顯示設定

■ 已申請的名單

您可以建立聯絡人列表，這些聯絡人的動態顯示狀態資料是您想留意的。僅當資料被您的聯絡人及網絡允許時，您才可以查看。要查看這些已申請的名單，在聯絡人中捲動或使用已申請的名單功能表。

確定使用的記憶體是手機還是手機和 SIM 卡。

要連接至動態顯示服務，選擇**功能表** > 通訊錄 > 我的動態顯示 > 連接至「我的動態顯示」服務。

添加聯絡人至已申請的名單

1. 選擇**功能表** > 通訊錄 > 已申請的名單。
2. 如果您的列表中沒有聯絡人，選擇**新增**。否則，選擇**操作** > 新申請。將顯示您的聯絡人列表。
3. 從列表中選擇聯絡人，如果聯絡人有已儲存的用戶識別碼，則該聯絡人已增加至已申請的名單。

查看已申請的名單

要查看動態顯示資料，請參閱「在通訊錄中尋找姓名」，刊於第 38 頁。

1. 選擇**功能表** > 通訊錄 > 已申請的名單。

   會顯示已申請的名單中第一個聯絡人的狀態資料。人們想要給其他人的信息包括文字和一些以下圖示：

   、 或 表示此人是線上的、忙碌的或離線的。

   表示沒有提供此聯絡人的動態顯示資料。
2. 選擇**詳情**查看所選聯絡人的詳細資料；或選擇**操作** > 新申請、發送訊息、發送名片或取消申請。

取消申請聯絡人

要從通訊錄列表中取消申請聯絡人，選擇聯絡人，然後選擇**詳情** > 用戶識別碼 > **操作** > 取消申請 > **確認**。

要取消申請，使用**已申請的名單**功能表。請參閱「查看已申請的名單」，刊於第 43 頁。

■ 設定

選擇**功能表** > 通訊錄 > 設定及以下選項：

記憶體選擇 — 爲您的通訊錄選擇 SIM 卡或手機記憶體

顯示方式 — 用於選擇聯絡人的姓名及號碼的顯示方式

記憶體狀態 — 查看可用及已用的記憶體容量

■ 群組

選擇**功能表** > 通訊錄 > 群組將儲存於記憶體中的姓名及電話號碼編排至配備不同鈴聲和群組圖像的號碼分組中。

■ 單鍵撥號

要設定號碼至單鍵撥號鍵，選擇**功能表** > 通訊錄 > 單鍵撥號，然後捲動至想要的單鍵撥號號碼。

選擇設定，或如果該鍵已設定號碼，選擇**操作** > 更改。選擇尋找，選擇姓名，然後選擇您想要設定的號碼。如果單鍵撥號功能已關閉，手機會詢問您是否要啓動此功能。另請參閱單鍵撥號，刊於「通話」，第 49 頁。

要使用單鍵撥號鍵撥打電話，請參閱「單鍵撥號」，刊於第 11 頁。

■ 廣播、服務及本手機號碼

選擇**功能表** > 通訊錄及以下功能：

客戶服務號碼 — 致電您服務供應商的客戶服務號碼，如果您的 SIM 卡內已提供此號碼 (網絡服務)

服務號碼 — 致電您服務供應商的服務號碼，如果您的 SIM 卡內已提供此號碼 (網絡服務)

本手機號 — 查看已設定至您 SIM 卡的電話號碼，如果您的 SIM 卡內已提供此號碼

9. 設定

■ 操作模式

手機有各種設定分組、通話操作模式，您可以爲不同情況和環境設定適合的鈴聲。

選擇**功能表** > 設定 > 操作模式。捲動至操作模式，然後選擇。

要啓動選定的操作模式，選擇啓動。

要設定操作模式啓動一段時間 (最長爲 24 小時)，選擇定時，然後設定結束時間。當爲操作模式設定的時間過後，以前沒有定時的操作模式將啓動。

要個人化操作模式，選擇個人化選擇。選擇您要更改的設定，然後更改。要更改您的動態顯示狀態資料，選擇我的動態顯示 > 我的動態資料或我的顯示訊息。如果您設定與操作模式同步處理爲開，則我的動態顯示功能表可以使用。請參閱「我的動態顯示」，刊於第 41 頁。

■ 佈景

一個佈景包括很多個人化您手機的元素，例如：背景圖片、螢幕保護圖案、彩色模式和鈴聲 (您的手機支援 MP3 格式鈴聲)。

選擇**功能表** > 設定 > 佈景及以下選項：

選擇佈景 — 設定您手機中的佈景。會開啓多媒體資料中的一個資料夾列表。開啓佈景資料夾，然後選擇佈景。

佈景下載 — 開啓一個連結的列表以下載更多的佈景。請參閱「下載檔案」，刊於第 69 頁。

鈴聲

您可以更改所選當前操作模式的設定。

選擇**功能表** > 設定 > 鈴聲。選擇然後更改來電提示、鈴聲、鈴聲音量、振動提示、訊息提示聲、即時訊息提示聲、按鍵音及警告音。您可在操作模式功能表內找到相同的設定。請參閱「操作模式」，刊於第 46 頁。

要設定手機僅在收到所選聯絡人群組中的電話時才響鈴，選擇優先號碼組。捲動至想要的來電分組或所有來電，然後選擇**標記**。

燈光

要設定在翻蓋已合上時，指示燈開啓以顯示手機狀態的改變，選擇**功能表** > 設定 > 燈光 > 燈光效果 > 開。

我的快捷操作

使用個人快捷操作，您可以快速存取手機中經常使用的功能。要管理快捷操作，選擇**功能表** > 設定 > 我的快捷操作及以下選項：

右選擇鍵 — 爲右選擇鍵從列表選擇功能。另請參閱「待機模式」，刊於第 6 頁。此功能表可能不會顯示，視乎您的服務供應商而定。

導航鍵 — 爲導航鍵選擇快捷操作功能。捲動至想要的導航鍵，然後選擇**更改**及列表中的功能。要移除按鍵上的快捷操作功能，選擇 (空白)。要重新爲按鍵設定功能，選擇**設定**。此功能表可能不會顯示，視乎您的服務供應商而定。

螢幕

選擇**功能表** > 設定 > 螢幕及以下選項：

背景圖片 — 增加背景圖片至待機模式下的螢幕中。要選擇、啓動或關閉背景圖片，選擇選擇背景圖片 > 開或關。選擇投影片組及多媒體資料內的資料夾，使用資料夾中的圖像作爲投影片組。要下載更多的圖像作背景圖片，選擇 圖案下載。

螢幕保護圖案 > 開 — 啓動螢幕上的螢幕保護圖案。要輸入螢幕保護圖案在多長時間後啓動，選擇啓動時間。要爲螢幕保護圖案選擇圖片，選擇螢幕保護圖案 > 圖像，並在多媒體資料資料夾中選擇圖像或圖片。要下載更多的圖像作爲螢幕保護圖案，選擇圖案下載。

省電螢幕保護 > 開 — 節省電池的一些電量。當沒有使用手機功能一段時間後，數碼時鐘便會顯示。

顏色模式 — 用於更改某些顯示部分的顏色，例如：功能表背景顏色及訊號和電池電量條的顏色

待機狀態的字體顏色 — 選擇待機模式下螢幕上文字的顏色

網絡標誌 — 設定手機顯示或不顯示網絡標誌。如果您沒有儲存網絡標誌，此功能會變暗。如要獲取更多有關網絡標誌供應的資料，請與您的網絡商或服務供應商聯絡。

■ 時間和日期

選擇**功能表** > 設定 > 時間和日期及以下選項：

時鐘 — 設定手機在待機模式下顯示時鐘，調校時鐘及選擇時區和時間格式

日期 — 設定手機在待機模式下顯示日期，設定日期，並選擇日期格式及日期分隔符號

自動更新時間 (網絡服務) — 設定手機根據當前的時區自動更新時間和日期

■ 通話

選擇**功能表** > 設定 > 通話及以下選項：

來電轉接 (網絡服務) — 轉接您的來電。如果已啓動某些通話限制功能，您可能不能轉接來電。請參閱通話限制，刊於「保密」，第 53 頁。

任何鍵接聽 > 開 — 簡單按任意鍵接聽來電，除了結束鍵及左、右選擇鍵。

打開翻蓋時接聽 > 開 — 在打開手機翻蓋時直接接聽來電。

自動重撥 > 開 — 設定手機在試撥失敗後繼續試撥，最多試撥十次。

單鍵撥號 > 開 — 啓動單鍵撥號。要設定單鍵撥號，請參閱「單鍵撥號」，刊於第 44 頁。要撥號，按住對應的數字鍵。

來電等待 > 啓動 — 設定網絡在您通話時通知有另一來電 (網絡服務)。請參閱 「來電等待」，刊於第 12 頁。

通話總結 > 開 — 設定手機在每次通話後簡單顯示該次通話的大約時間和費用 (網絡服務)。

發送本手機號 (網絡服務) > 網絡預設或是、否

用戶撥出號碼 (網絡服務) — 選擇使用電話號碼 1 或 2 撥打電話 (如果您的 SIM 卡支援的話)

■ 手機

選擇**功能表** > 設定 > 手機及以下選項：

手機語言 — 設定顯示語言

記憶體狀態 — 查看多媒體資料、訊息及應用程式中可用及已用記憶體

安全鍵盤鎖 — 設定手機在開啓鍵盤鎖時要求保密碼。輸入保密碼，確認該密碼，然後選擇開。

當鍵盤鎖定時，仍然可以撥打已編入本裝置內的官方緊急號碼。

小區訊息顯示 > 開 — 根據使用的流動網絡從服務供應商處接收資料 (網絡服務)

問候語 — 編寫手機在開機時簡單顯示的問候語

網絡商選擇 > 自動 — 設定手機自動從您所在區域可用的流動網絡中選擇。使用手動，您可選擇與您的本地網絡商有漫遊協定的網絡。

SIM 更新提示 — 請參閱 「SIM 服務」，刊於第 75 頁。

說明訊息顯示 — 選擇手機是否顯示說明文字

開機鈴聲 — 選擇手機在開機時是否播放開機鈴聲

■ 數據連線

通用分組無線服務 (GPRS) 技術是一種能讓流動電話透過基於網絡的互聯網協議 (IP) 發送和接收數據的網絡服務。GPRS 是一種數據傳輸方式，能讓無線裝置以類似互聯網的方式存取數據網絡。

可能使用 GPRS 的應用程式包括：MMS、瀏覽及 Java 應用程式下載。

在您使用 GPRS 技術前，請與您的網絡商或服務供應商聯絡以獲取 GPRS 服務的供應情況與申請事項。爲透過 GPRS 使用的每個應用程式儲存 GPRS 設定。如要獲取有關價格的資料，請與您的網絡商或服務供應商聯絡。

選擇**功能表** > 設定 > 數據連線 > 分組數據 > 分組數據連接建立 GPRS 連接。

要設定手機在開機時自動註冊至 GPRS 網絡，選擇保持連線。

選擇當需要時，設定手機在應用程式需要時登入 GPRS 網絡並建立連接，並在結束應用程式時中斷連接，

■ 增強配套

僅當手機正在或已經連接至兼容流動增強配套時，此功能表才會顯示。

選擇**功能表** > 設定 > 配套。如果對應的增強配套正在或已經連接至手機，您可以選擇增強配套功能表。根據增強配套，選擇以下選項：

預設模式 — 選擇在連接所選增強配套後自動啓動的操作模式

自動接聽 — 設定手機在收到來電 5 秒後自動接聽。如果來電提示已設定爲嗶一聲或關，自動接聽便會關閉。

文字電話 > 使用文字電話 > 是 — 使用文字手機設定取代耳機或感應迴路設定

■ 配置

您可以爲您手機的某些服務的功能正確配置設定。這些服務包括瀏覽器、多媒體訊息、動態顯示及電郵應用程式。從您的 SIM 卡，或以配置訊息的形式從服務供應商處獲取設定，或手動輸入您的個人設定。

要儲存以配置訊息形式從服務供應商處接收的配置設定，請參閱「配置設定服務」，刊於第 xiii 頁。

選擇**功能表** > 設定 > 配置及以下選項：

預設配置設定 — 查看儲存於您手機內的服務供應商。捲動至服務供應商，然後選擇**詳情**查看此服務供應商配置設定支援的應用程式。要設定服務供應商的配置設定爲預設設定，選擇**操作** > 設爲預設。要刪除配置設定，選擇刪除。

在全部應用程式中啓動預設 — 啓動支援的應用程式的預設配置設定

首選接入點 — 查看儲存的接入點。捲動至接入點，然後選擇操作 > 詳情檢視服務供應商的名稱、數據傳輸方式及分組數據接入點。

連接至服務供應商支援 — 從服務供應商處下載配置設定

個人配置設定 — 爲不同的服務手動增加個人帳號，及啓動或刪除這些帳號。要新增個人電腦帳號，如果您還沒有增加任何帳號，選擇**新增**；否則，選擇**操作** > 新增。選擇服務類型，然後選擇及輸入每個要求的參數。參數視乎所選服務的類型而有所不同。要刪除或啓動個人帳號，捲動至該帳號，然後選擇**操作** > 刪除或啓動。

保密

當正在使用限制通話的安全功能時 (例如：通話限制、封閉用戶組和固定撥號)，您仍可撥打已編入您裝置的官方緊急號碼。

選擇**功能表** > 設定 > 保密及以下選項：

開機 PIN 碼 — 設定手機在每次開機時要求輸入 PIN 碼或 UPIN 碼。有些 SIM 卡不允許關閉要求密碼功能。

通話限制 (網絡服務) — 限制撥打至您手機或從您手機打出的電話。需要限制密碼。

固定撥號 — 限制您只能向所選的電話號碼撥打電話 (如果您的 SIM 卡支援此功能)

封閉用戶組 (網絡服務) — 指定可以與您互通電話的一組人

保密項目 > 手機 — 手機在每次插入新的 SIM 卡時要求輸入保密碼。選擇手機通訊錄，手機會在您已選擇 SIM 卡記憶體且想要更改使用的記憶體時，要求輸入保密碼。

密碼功能 — 設定使用的 PIN 碼或 UPIN 碼，或更改保密碼、PIN 碼、UPIN 碼、PIN2 碼及通話限制密碼

當前使用密碼 — 選擇是否啓動 PIN 碼或 UPIN 碼

PIN2 碼要求 — 用以選擇當使用受 PIN2 碼保護的手機特殊功能時，是否要求 PIN2 碼

■ 恢復原廠設定

要把部分功能表的設定重新設定爲原廠值，選擇**功能表** > 設定 > 恢復原廠設定。輸入保密碼。您已輸入或下載的數據，例如：儲存在通訊錄中的姓名和電話號碼都不會被刪除。

10. 多媒體資料

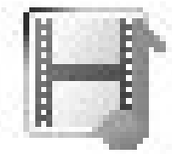

在此功能表中，您可以管理圖片、圖像、佈景主題及鈴聲。這些檔案在資料夾內已整理妥當。

您的手機支援啓動密鑰系統保護獲得的內容。在申請各項服務內容和啓動密鑰之前，請先查閱清楚傳輸條款，因爲可能要收取一定費用。

版權保護可以防止一些圖像、鈴聲和其他內容被複製、修改、傳送或轉發。

要查看資料夾的列表，選擇**功能表** > 多媒體資料。

要查看資料夾的可用選項，選擇資料夾 > **操作**。

要查看資料夾中的檔案列表，選擇資料夾 > **打開**。

要查看檔案的可用選項，選擇檔案 > **操作**。

某些檔案受啓動密鑰保護。

要更新所選檔案的啓動密鑰，選擇**操作** > 啓動內容。僅當檔案支援啓動密鑰更新時，此選項才會顯示。

要查看所有可用啓動密鑰的列表，選擇**操作** > 啓動密鑰列表。您可以刪除啓動密鑰 (例如：刪除那些已過期的)。

11. 電子秘書

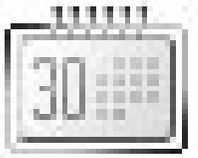

■ 鬧鐘

您可以設定手機在想要的時間響鬧。選擇**功能表** > 電子秘書 > 鬧鐘。

要設定響鬧，選擇響鬧時間，然後設定響鬧時間。要在已設定響鬧時間後更改，選擇開。要設定手機在一星期中的選定日子提醒您，選擇重複響鬧。

要選擇響鬧鈴聲，選擇響鬧鈴聲。

要設定重響逾時，選擇重響逾時。

停止響鬧

手機會發出響鬧鈴聲，並且預定報時及當前時間會在螢幕上閃爍(即使手機已關機)。要停止響鬧，選擇**停止**。如果您讓手機持續響鬧一分鐘或選擇**重響**，響鬧會暫停直到選擇的重響逾時時間，然後回復響鬧。

如果在關閉裝置的狀態下到了響鬧時間，裝置將自行啓動而且開始發出響鬧聲。如果您選擇**停止**，裝置會詢問您是否要啓動裝置以作通話。選擇**取消**關閉裝置，或**確認**撥打及接收電話。當使用無線電話可能造成干擾或危險時，不要選擇**確認**。

■ 日曆

選擇**功能表** > 電子秘書 > 日曆。

方框圍著的日期表示當天日期。如果在該日有任何備註，該日便以粗體顯示。要查看該日備註，選擇**顯示**。要查看星期，選擇**操作** > 星期顯示格式。要刪除日曆中的所有備註，選擇月或星期檢視，然後選擇**操作** > 刪除全部備註。

按天檢視的其他選項爲寫備註內容、刪除、編輯、移動或重複備註；複製備註至其他日子；以文字訊息、多媒體訊息形式發送備註或至其他兼容手機的日曆中。在設定中您可以設定日期和時間設定。在自動刪除備註中，您可以設定手機在指定時間後自動刪除舊的備註。

建立日曆備註

選擇**功能表** > 電子秘書 > 日曆。捲動至您想要的日期，然後選擇**操作** > 寫備註內容，然後選擇以下其中一項備註類型：
會議、通話、生日、備忘或 備忘錄。

備註響鬧

手機會發出響鬧聲及顯示備註。當螢幕上顯示通話備註 時，按通話鍵撥打顯示的電話號碼。要停止響鬧及查看備註，選擇**顯示**。要停止響鬧約 10 分鐘，選擇**重響**。要停止響鬧但不想查看備註，選擇**退出**。

農曆

要使用農曆，手機語言必須爲中文。

在按月檢視中，與突出顯示的日子有關的農曆資料顯示在螢幕右上角。

要查看與突出顯示的日子有關的農曆詳細資料，在按月檢視內，選擇**操作** > 農曆日曆，農曆按天檢視便會顯示。

要尋找農曆節日，在農曆按天檢視內，選擇**節日**，輸入春節所屬的西曆 (格勒哥里曆法) 年份，接著選擇想要的農曆節日。

在農曆按天檢視內，選擇**操作**，接著：

- 節氣尋找陽曆項目。輸入春節所屬的西曆 (格勒哥里曆法) 年份，接著選擇想要的陽曆項目。
- 公曆轉農曆將西曆 (格勒哥里曆法) 轉換成農曆。輸入想要的西曆 (格勒哥裏曆法) 日期。
- 農曆轉公曆將農曆轉換成西曆 (格勒哥里曆法)。輸入春節所屬的西曆 (格勒哥里曆法) 年份，接著選擇想要的農曆日期。如果顯示兩個結果，選擇您想要的一個。

■ 待辦事項

要爲您必需做的工作儲存備註，選擇**功能表** > 電子秘書 > 待辦事項。

要建立備註，如果沒有新增備註，選擇**新增**；否則，選擇**操作** > 新增。編寫備註，然後選擇**儲存**。選擇備註的優先等級、最後期限及響鬧類型。

要查看備註，捲動至該備註，然後選擇**顯示**。

您亦可以選擇選項刪除選定的備註及刪除所有您已標記爲已完成的備註。您可以按優先等級或最後期限將備註排序，以文字訊息或多媒體訊息的形式發送備註至其他手機、儲存備註爲日曆備註，或存取日曆。

當查看備註時，您亦可以選擇選項編輯備註的最後期限或優先等級，或將備註標記爲已完成。

備註

要使用此應用程式編寫及傳送備註，選擇**功能表** > 電子秘書 > 備註。要建立備註，如果沒有新增備註，選擇**寫備註**；否則，選擇**操作** > 寫備註內容。編寫備註，然後選擇**儲存**。

其他的備註選項包括刪除及編輯備註。當編輯備註時，您亦可以不儲存更改便退出文字編輯器。您可以使用文字訊息或多媒體訊息傳送備註至兼容裝置。

計算機

您手機裏的計算機可作加、減、乘、除、計算平方和平方根及轉換貨幣值。

注意：此計算機的準確度有限，僅適用於簡單計算。

選擇**功能表** > 電子秘書 > 計算機。當螢幕顯示 0 時，輸入計算中的第一個數字。按 # 鍵輸入小數點。選擇**操作** > 加、減、乘、除、平方、平方根或更改正負號。輸入第二個數字。要獲取結果，選擇**等於**。根據所需的次數重複此次序。要開始新的計算，先選擇然後按住**清除**。

要執行貨幣轉換，選擇**功能表** > 電子秘書 > 計算機。要儲存匯率，選擇**操作** > 設定匯率。從顯示的選項中選擇一個。輸入匯率，按 # 鍵輸入小數點，然後選擇**確認**。輸入另一匯率之前，此匯率將儲存於記憶體內。要執行貨幣轉換，輸入要轉換的總額，然後選擇**操作** > 換至本國貨幣或換至外幣單位。

注意：當您更改基本貨幣時，您需要輸入新匯率，因爲所有以前設定的匯率均會被設爲零。

計時錶

可以使用計時錶計時、測量分別計時或以圈計時。計時期間仍可使用手機的其他功能。要在背景進行計時，按結束鍵。

使用計時錶或當使用其他功能時容許其在背景運行，將增加電池的耗電量及縮短電池壽命。

選擇**功能表** > 電子秘書 > 計時錶及以下選項：

分別計時 — 測量分別計時。要開啓時間測量，選擇**開始**。每次當您要測量分別計時時，選擇**分別計**。要停止時間測量，選擇停止。要儲存測量的時間，選擇**儲存**。要再次開啓時間測量，選擇**操作** > 開始。從前一次的時間繼續計時。要放棄儲存時間及重新設定，選擇重新設定。要在背景進行計時，按結束鍵。

以圈計時 — 測量以圈計時。要在背景進行計時，按結束鍵。

繼續 — 查看在背景中的計時。

顯示最後時間 — 如果計時錶沒有重設時，查看最近測量的時間。

查看時間或刪除時間 — 查看或刪除已儲存的時間

■ 倒數計時器

選擇**功能表** > 電子秘書 > 倒數計時器。以小時、分鐘及秒的格式輸入響鬧時間，然後選擇**確認**。如有需要，可輸入時間到期時顯示的備註文字。要開始倒數計時，選擇開始。要更改倒數時間，選擇更改時間。要停止計時器，選擇停止計時。

如果當手機處於待機模式下時到達響鬧時間，手機便會發出鈴響及閃爍備註文字 (如果已設定) 或倒數計時結束。要停止響鬧，可以按任意鍵。如果不按任何鍵，響鬧會在 60 秒鐘內自動停止。要停止響鬧及刪除備註文字，選擇**退出**。要重新開啓倒數計時器，選擇**重計時**。

12. 應用程式

遊戲

您手機的軟件包括一些遊戲。

啟動遊戲

選擇**功能表** > 應用程式 > 遊戲。捲動至想要的遊戲，然後選擇打開。

如要獲取有關遊戲的選項，請參閱 「其他應用程式選項」，刊於第 63 頁。

遊戲下載

選擇功能表 > 應用程式 > **操作** > 下載 > 遊戲下載。便會顯示可用的書籤列表。選擇更多書籤存取網絡 功能表中的書籤列表。請參閱 「書籤」，刊於第 68 頁。

重要資料：僅安裝及使用來自對有害軟件提供足夠防護措施來源的應用程式和其他軟件。

遊戲設定

要設定遊戲的聲音、燈光及振動，選擇功能表 > 應用程式 > **操作** > 應用程式設定。

集合

您手機的軟件包括一些專爲此 Nokia 手機設計的 Java 應用程式。

啟動應用程式

選擇**功能表** > 應用程式 > 集合。捲動至應用程式，然後選擇打開。

其他應用程式選項

刪除 — 刪除手機中的應用程式或應用程式設定

詳情 — 查看有關應用程式的附加資料

更新版本 — 查看應用程式的新版本是否可從網絡中下載 (網絡服務)。

應用程式存取 — 限制應用程式存取網絡。會顯示不同的類別。在各個類別中進行選擇，可使用以下選項之一：每次詢問，手機在每次存取網絡時詢問；首次使用時詢問，手機僅在第一次嘗試存取網絡時詢問；保持允許，允許存取網絡；或不允許，不允許存取網絡。

網頁 — 從互聯網網頁提供應用程式的進一步資料或其他數據。此功能需要網絡支援。僅當互聯網地址隨應用程式提供時，此功能才會顯示出來。

下載應用程式

您的手機支援 J2ME Java 應用程式。下載應用程式前需確認其是否與您的手機兼容。

重要資料：僅安裝及使用來自對有害軟件提供足夠防護措施來源的應用程式和其他軟件。

您可使用多種不同的方式下載新的 Java 應用程式。

選擇**功能表** > 應用程式 > **操作** > 下載 > 應用程式下載。便會顯示可用的書籤列表。選擇更多書籤存取網絡 功能表中的書籤列表。選擇合適的書籤連接至想要的網頁。如要獲取不同服務的供應、價格與收費的資料，請與您的服務供應商聯絡。

選擇**功能表** > 網絡 > 下載連結。下載適當的應用程式或遊戲。請參閱 「下載檔案」，刊於第 69 頁。

使用遊戲下載功能。請參閱 「遊戲下載」，刊於第 62 頁。

您的裝置可能帶有一些與 Nokia 無關網站的書籤。Nokia 不保證或認可這些網站。如果您選擇存取這些網站，應象對待任何其他互聯網一樣對安全或其內容採取預防措施。

13. 網絡

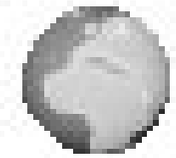

您可以使用手機的瀏覽器存取各式各樣的流動互聯網服務。

重要資料：僅使用您信賴及提供充分安全保證的服務，抵禦有害軟件。

請向您的服務供應商查詢有關這些服務的供應、價格、收費及指引的資料。

透過手機的瀏覽器，您可以到網頁上查看使用無線標記語言 (WML) 或可伸延超文本標記語言 (XHTML) 的服務。外觀可能因螢幕大小而有所不同。您可能無法查看互聯網網頁的所有詳細資料。

設定瀏覽

您可以從爲您提供所需服務的網絡商或服務供應商處接收瀏覽功能所需的配置設定，設定以配置訊息形式發送。請參閱「配置設定服務」，刊於第 xiii 頁。您亦可手動輸入所有配置設定。請參閱「配置」，刊於第 52 頁。

連接至服務

首先，確認已啓動您想使用的服務的正確配置設定。

1. 要選擇連接至服務的設定，選擇**功能表** > 網絡 > 設定 > 配置設定。

2. 選擇配置。僅顯示支援瀏覽服務的配置。選擇服務供應商，瀏覽的預設或個人配置。請參閱「設定瀏覽」，刊於第 65 頁。

   選擇帳號及當前配置設定中包含的瀏覽服務帳號。

然後，使用以下其中一種方式建立連接：

- 選擇**功能表** > 網絡 > 主頁；或在待機模式下，按住 0。
- 要選擇服務的書籤，選擇**功能表** > 網絡 > 書籤。
- 要選擇最後的 URL，選擇**功能表** > 網絡 > 上回瀏覽網址。
- 要輸入服務的地址，選擇**功能表** > 網絡 > 選擇位址，輸入服務的地址，然後選擇**確認**。

■ 瀏覽網頁

在您建立與服務的連接之後，您可以開始瀏覽網頁。手機按鍵的功能可能因服務的不同而有所分別。請遵照手機螢幕上的文字指示。如要獲取更多有關資料，請與您的服務供應商聯絡。

如果選擇分組數據爲數據傳輸方式，瀏覽時指示符號 G 會顯示於螢幕的左上方。如果您在分組數據連接期間接聽來電或接收文字訊息，或撥打電話，會顯示於螢幕的右上方，表示分組數據連接暫停 (保留)。在通話後，電話嘗試重新建立分組數據連接。

用手機按鍵瀏覽

使用導航鍵在網頁中瀏覽。

要選擇突出顯示的項目，按通話鍵，或選擇**選擇**。

要輸入字母及數字，按 0 至 9 鍵。要輸入特殊字元，按 *。

瀏覽時可用的選項

主頁、快捷操作、增加書籤、書籤、網頁選項、歷程記錄、下載連結、其他選項、存至資料夾、重新下載及退出可能可用。服務供應商也可能提供其他選項。

直接撥號

瀏覽器可能支援您在瀏覽時可以存取的功能。您可以撥打電話、在語音通話中發送 DTMF 音，及儲存網頁上的姓名和電話號碼。

■ 外觀設定

當瀏覽時，選擇**操作** > 其他選項 > 外觀設定；或者在待機模式下，選擇**功能表** > 網絡 > 設定 > 外觀設定及以下選項：

文字換行 > 開 — 設定螢幕上的文字在下一行繼續。如果您選擇關，文字會被縮寫。

字體大小 > 特小字體、小字體或中字體 — 設定字體大小

顯示圖像 > 不顯示隱藏網頁中的圖片。這樣可以加快瀏覽含有大量圖片網頁的速度。

提示 > 不安全連接提示 > 是 — 設定手機當瀏覽期間的加密連接更改爲非加密連接時提示。

提示 > 不安全資料提示 > 是 — 設定手機在加密的網頁中包含不安全項目時提示。這些提示並不保證安全連接。如要獲取更多資料，請參閱「瀏覽器安全性」，刊於第 71 頁。

字元編碼 > 內容編碼 — 選擇瀏覽頁內容的編碼。

字元編碼 > Unicode (UTF-8) 網址 > 開 — 設定手機以 UTF-8 編碼發送 URL。當您存取以外國語言建立的網頁時可能需要此設定。

螢幕大小 > 完整畫面或小畫面 — 設定螢幕大小

Cookies

Cookie 是網站儲存於您手機瀏覽器快取記憶體中的數據。Cookies 會儲存至您刪除快取記憶體時。請參閱「快取記憶體」，刊於第 71 頁。

當瀏覽時，選擇**操作** > 其他選項 > 保密選項 > Cookie 設定；或在待機模式下，選擇**功能表** > 網絡 > 設定 > 保密設定 > Cookies。要允許或禁止手機接收 cookies，選擇允許接收或不允許接收。

透過安全連接的指令檔

您可以選擇是否允許運行安全網頁上的指令檔。手機支援 WML 指令檔。

1. 在瀏覽中選擇**操作** > 其他選項 > 保密選項 > 指令檔設定；或在待機模式下選擇**功能表** > 網絡 > 設定 > 保密設定 > 在安全連接中使用指令檔。
2. 要允許指令檔，選擇允許接收。

書籤

您也可以把網頁地址儲存爲手機記憶體內的書籤。

1. 當瀏覽時，選擇**操作** > 書籤；或在待機模式下，選擇**功能表** > 網絡 > 書籤。

2. 捲動至書籤，然後選擇該書籤；或按通話鍵連接與至書籤相關的網頁。
3. 選擇**操作**查看、編輯、刪除或發送書籤；新建書籤；或儲存書籤至資料夾。

您的裝置可能帶有一些與 Nokia 無關網站的書籤。Nokia 不保證或認可這些網站。如果您選擇存取這些網站，應象對待任何其他互聯網一樣對安全或其內容採取預防措施。

接收書籤

當您已接收一個書籤 (以書籤形式發送)，手機會顯示收到 1 個書籤。要儲存書籤，選擇**顯示** > **儲存**。要查看或刪除書籤，選擇操作 > 查看麼刪除。要在您接收書籤後直接放棄，選擇**退出** > 確認。

■ 下載檔案

要下載更多鈴聲、圖像、遊戲或應用程式至您的手機 (網絡服務)，選擇**功能表** > 網絡 > 下載連結 > 鈴聲下載、圖案下載、遊戲下載、佈景下載或應用程式下載。

重要資料：僅安裝及使用來自對有害軟件提供足夠防護措施來源的應用程式和其他軟件。

要在多媒體資料或應用程式中自動儲存所有已下載的檔案，選擇**功能表** > 網絡 > 設定 > 下載設定 > 自動儲存 > 開。

■ 服務信箱

手機能夠接收您的服務供應商發來的服務訊息 (宣傳訊息) (網絡服務)。服務訊息是一些通知 (例如新聞標題)，而且可能包含文字訊息或服務地址。

當您接收服務訊息後，在待機模式下存取服務信箱，選擇**顯示**。如果您選擇**退出**，訊息會移至服務信箱。要稍後存取服務信箱，選擇**功能表** > 網絡 > 服務信箱。

要在瀏覽時存取服務信箱，選擇**操作** > 其他選項 > 服務信箱。捲動至您想要的訊息，然後選擇**提取**啓動瀏覽器及下載標記的內容。要顯示服務通知的詳細資料或刪除訊息，選擇**操作** > 詳情或刪除。

服務信箱設定

選擇**功能表** > 網絡 > 設定 > 服務信箱設定。

要設定您是否想要接收服務訊息，選擇服務訊息 > 開或關。

要設定手機僅接收來自服務供應商許可的內容作者的服務訊息，選擇訊息篩選 > 開。要查看獲認可內容的作者列表，選擇委任頻道。

要設定手機在接收服務訊息後自動從待機模式啓動瀏覽器，選擇自動連接 > 開。如果您選擇關，當手機接收到服務訊息時，僅在您已選擇提取後才啓動瀏覽器。

快取記憶體

快取記憶是用來暫時儲存資料的記憶體位置。如果您嘗試存取或已經存取需要密碼的機密資料，請在每次使用後清除快取記憶。您已存取的資料或服務儲存於快取記憶體中。

要清空快取記憶體，當瀏覽時，選擇**操作** > 其他選項 > 清除快取記憶體；在待機模式下，選擇**功能表** > 網絡 > 清除快取記憶體。

定位資料

網絡向您發送一個位置要求。您可確定僅當您同意時，網絡才向您的手機發送位置資料 (網絡服務)。請與您的網絡商或服務供應商聯絡，申請及同意接收位置資料。

要接受或拒絕位置要求，選擇**接受**或**拒絕**。如果您錯過一個要求，手機將自動根據您與您的網絡商或服務供應商訂下的協定而接受或拒絕該要求。手機顯示 1 個未接到的位置要求。要查看未收到的位置要求，選擇**顯示**。

要查看最近 10 個私人通知及要求的資料，或要刪除這些通知或要求，選擇**功能表** > 網絡 > 定位 > 位置記錄 > 打開資料夾或全部刪除。

瀏覽器安全性

一些服務可能要求安全功能，例如在線銀行或購物服務。對於此類連接，您需要進行安全認證，還可能需要安全模組，SIM 卡上可能會提供此模組。如要獲取更多有關資料，請與您的服務供應商聯絡。

安全模組

安全模組對需要瀏覽器連接的應用程式提供安全服務，且允許您使用數碼簽名。安全模組可能包含證書以及私人密匙和公開密匙。證書由服務供應商儲存於安全模組中。

選擇**功能表** > 網絡 > 設定 > 保密設定 > 安全模組設定及以下選項：

安全模組詳情 — 顯示安全模組主題、狀態、製造商和序列號碼

模組 PIN 碼請求 — 設定手機在使用安全模組提供的服務時要求模組 PIN 碼。輸入密碼，然後選擇開。要刪去模組 PIN 碼要求，選擇關。

更改模組 PIN 碼 — 更改模組 PIN 碼 (如果安全模組允許)。輸入當前 PIN 碼，然後輸入新的 PIN 碼兩次。

更改簽名 PIN 碼 — 更改數碼簽名的簽名 PIN 碼。選擇要更改的簽名 PIN 碼。輸入目前的 PIN 碼，然後輸入新的 PIN 碼兩次。

請參閱「密碼」，刊於第 xi 頁。

證書

重要資料：注意，縱使利用證書大致可降低遠端連接及軟件安裝的風險，它們必須正確地使用才能從增強的安全性中獲益。證書本身不提供任何自我保護；證書管理者必須包含正確、可信，或可靠的證書以提高可用的安全度。證書有時間限制。假如證書應該有效但顯示該證書已過期或失效，請檢查您裝置內的當前日期和時間是否正確。

修改任何證書設定前，需要確定您確實信賴證書的持有者及該證書確實屬於所列出的持有者。

有以下三種證書：伺服器證書、授權證書及用戶證書。您可以從服務供應商處接收這些證書。授權證書及用戶證書亦由服務供應商儲存於安全模組內。

要查看您下載至手機中的授權證書及用戶證書，選擇**功能表** > 網絡 > 設定 > 保密設定 > 授權證書或用戶證書。

如果手機與內容伺服器之間的數據傳輸已經過加密，便會在連接中顯示安全指示符號 。

該安全圖標並不表示閘道與內容伺服器 (或儲存所需資源的地方) 之間的數據傳輸是安全的。服務供應商確保閘道與內容伺服器之間數據傳輸的安全。

數碼簽名

如果您的 SIM 卡備有安全模組，您可用手機進行數碼簽名。使用數碼簽名如同在紙質票據、書面合約或其他文件簽署您的姓名一樣。

要建立數碼簽名，在頁面上選擇一個連接，例如，希望購買的一本書的書名及其價格。會顯示要簽署的文字，可能包括金額及日期。

檢查標題文字是否爲讀取以及數碼簽名圖標 是否顯示。

如果數碼簽名圖標未顯示，則表示違反安全性，不要輸入任何個人數據，如簽名 PIN 碼。

要簽署文字，首先閱讀所有文字，然後選擇**簽名**。

一個螢幕內可能不夠顯示全部文字。因此，在簽名之前要上下捲動，確保閱讀全部文字。

選擇您想要使用的用戶證書。輸入簽名 PIN 碼 (請參閱 「密碼」，刊於第 xi 頁)，然後選擇**確認**。數碼簽名圖標消失，並且服務可能顯示有關您購物的確認訊息。

14. SIM 服務

您的 SIM 卡可能提供您可以存取的其他服務。此功能表僅當您的 SIM 卡支援時才會顯示。功能表的名稱及內容視乎 SIM 卡而定。

如要獲取有關 SIM 服務的供應及資料，請與您的 SIM 卡經銷商聯絡。也可能是服務供應商、網絡商或其他經銷商。

要設定手機在當您使用 SIM 服務時向您顯示手機及網絡之間傳送的確認訊息，選擇**功能表** > 設定 > 手機 > SIM 更新提示 > 顯示。

存取這些服務可能需要發送訊息或撥打電話，而這些是需要繳付費用的。

15. 電池資料

■ 充電及放電

您的裝置由充電電池供電。新電池在二到三次完全充電和放電的週期之後才能達到最佳性能。電池可以充電、放電幾百次，但最終亦會失效。當通話時間及待機時間明顯短於正常時間時，請更換電池。僅使用 Nokia 許可的電池，且僅使用 Nokia 許可的、專爲此裝置設計的充電器爲電池充電。

不使用充電器時將其從電源插頭及裝置中拔出。不要將完全充電的電池連接至充電器，因爲過分充電可能會縮短其壽命。如果已完全充電的電池擱置不用，電池本身便會不斷放電。

請勿將電池用作其他用途。請勿使用損壞的充電器或電池。

請勿使電池短路。當金屬物品 (如：硬幣、萬字夾或筆等) 直接接觸電池的正 (+) 極與負 (-) 極時，便有可能會發生意外短路的情況。(這些東西看上去像電池上的小金屬條。)例如，當您將備用電池放在口袋或背包中時，就有可能發生這種情況。電極的短路將會造成電池或觸及物品的毀損。

把電池留在過熱或過冷的地方 (如夏天或冬天的密閉車廂中)，會縮減電池電容量和壽命，以及其充電的能力。請盡量把電池保持在 15°C 及 25°C (59°F 及 77°F) 之間。如果裝上過熱或過冷之電池時，即使電池電量已飽和，手機亦可能暫時無法操作。電池的效能在冰點以下將大打折扣。

請勿將電池丟入火中，因爲這樣做電池可能會發生爆炸。電池亦可能在受到損壞時發生爆炸。請依當地的法例規定處理電池。請盡量回收以循環再用。請勿將電池當作家庭廢物般丟棄。

16. 原廠增強配套

您的手機有更多齊備的增強配套可供選擇。選擇符合您個人通訊需要的增強配套。

以下詳細說明某幾項增強配套。

如要獲取有關增強配套供應的資料，請向您當地的經銷商查詢。以下是有關使用增強配套的一些注意事項：

- 請將增強配套置於兒童無法觸及的地方。
- 切斷任何配件的電源時，請握住插頭及拔出，不要拉電線。
- 定期檢查車輛內所有手機裝置是否已正確地安裝及運作正常。

僅使用手機生產商許可的電池、充電器和增強配套。使用其他類型產品可能令適用於電話的任何保證或擔保無效，並可能產生危險。

■ 電量

類型	種類	通話時間*	待機時間*
BL-5B	鋰電池	長達 2.5 小時至 3.5 小時	長達 120 小時至 400 小時

* 使用時間視乎 SIM 卡、網絡及使用設定、使用型號和環境而定。使用 FM 收音機及綜合免提會影響通話時間及待機時間。

標準充電器 (ACP-7)

小巧、輕盈及耐用的 ACP-7 充電器爲手機提供簡單方便的快速充電途徑。將連接手機或充電座十分簡易。

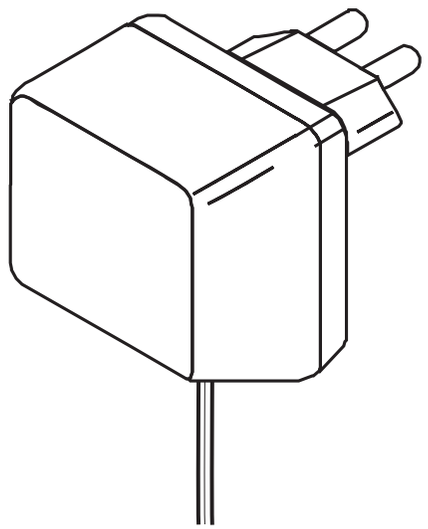

注意：插頭類型視乎不同市場而定。

旅行充電器 (ACP-12)

小巧、輕盈，採用多電壓 (100 - 240V) 切換技術的旅行充電器。爲手機提供簡單方便的充電途徑。

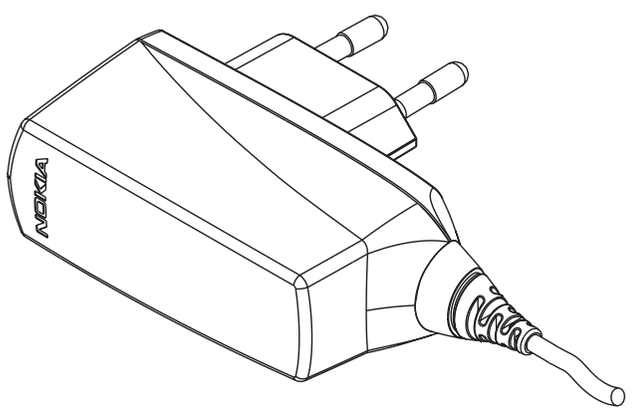

注意：插頭類型視乎不同市場而定。

■ 音效

Nokia 耳機 HDC-5

該耳機具備遙控功能，操作簡易。

17. 保養及維修

本裝置是採用優良技術設計的產品，務請小心使用。以下建議有助於您獲取對您的手機提供的保證。

- 請保持裝置乾燥。雨水、濕氣與各種液體或水份可能含有腐蝕電路的礦物質。如果您的裝置被弄濕，請移除電池，等到裝置完全乾燥後再放回電池。
- 請勿將裝置存放在佈滿灰塵、髒亂的地方或在這樣的地方使用裝置。活動式零件及電子元件可能較容易損壞。
- 請勿將裝置存放在高溫之處。高溫可能會縮短電子裝置的壽命、損壞電池，並使某些塑膠零件變形或熔化。
- 請勿把裝置存放在低溫之處。當手機升溫至正常的溫度時，其內部可能會產生濕氣，損壞電路板。
- 請勿嘗試使用本指南所指引以外的方式開啓裝置。
- 請勿扔擲、敲擊或搖晃裝置。粗暴的使用方式可能會破壞內部的電路板及精密構造。
- 請勿使用刺激性的化學製品、清潔溶劑或腐蝕性的清潔劑來清潔裝置。
- 請勿爲裝置塗上顏料。塗料可能會妨礙裝置的活動式零件，影響正常使用。
- 請使用所提供的或許可的備用天線。未經授權的天線、改裝或其他附件可能會破壞裝置，並可能違反無線裝置管制法。

- 請在室內使用充電器。
- 在您將裝置送往服務商店前，請緊記爲您想要保留的數據建立備份 (例如：通訊錄及日曆備註)。

以上所有建議均適用於本裝置、電池、充電器或其他任何增強配套。如果任何裝置不能正常操作，請送交就近的授權服務商店獲取服務。

18. 其他安全資料

您的裝置及其增強配套可能包括細小零件。請將其置於兒童無法觸及的地方。

■ 操作環境

請緊記，於任何場所均須遵守所有強制性的特殊規定，且在任何禁止使用裝置或可能造成干擾或危險的場所，亦請務必關閉裝置。請僅以正常操作姿勢使用裝置。當您以對著耳朵的正常姿勢使用裝置或當其置於距離您身體的至少 2.2 厘米 (7/8 英吋) 處時，此裝置符合 RF 暴露指引。請勿隨身攜帶含金屬材料的便攜套、皮帶扣或機架，並應將裝置放在距離身體上面規定的位置處。

爲了傳輸數據檔案或訊息，本裝置需要與網絡建立良好連接。一些情況下，可能會延遲數據檔案或訊息的傳輸，直至連接可以使用。在傳輸完成之前請務必遵循上述間距說明。

裝置某些部分具有磁性。裝置可能會吸引金屬物件。請勿將信用卡或其他磁性儲存媒體放在裝置附近，該媒體所儲存的資料可能因此被消除。

■ 醫療裝置

任何無線傳輸裝置的操作 (包括無線電話) 均可能會干擾防護不足的醫療設備之功能。請詢問醫生或醫療設備的製造商，確認這些設備是否能夠充分阻擋外部 RF 能量或其他問題。請在醫療診所等區域張貼的相關法規指示下關閉裝置。醫院或醫療診所可能正在使用容易受外部 RF 能量影響的設備。

心律調校器

心律調校器製造商建議在無線電話與心律調校器之間保持最少 15.3 厘米 (6 英吋) 的距離，以避免對心律調校器產生干擾。上述忠告與 Wireless Technology Research 的建議與其獨立的研究一致。配帶心律調校器的人需要作以下事情：

- 在裝置與心律調校器之間經常保持 15.3 厘米 (6 英吋) 的距離。
- 不要將裝置放在胸前的口袋
- 以沒有使用心律調校器那一邊的耳朵接聽電話，以減低干擾的可能性。

如果懷疑有干擾，請關閉裝置，並把裝置移開。

助聽器

有些數碼無線裝置可能會干擾助聽器。如果發生干擾，請向您的服務供應商查詢。

■ 汽車

無線射頻 (RF) 訊號可能會影響汽車上未適當安裝或未妥善隔絕的電子系統 (如電子燃油噴注系統、電子防滑 (防鎖) 剎車系統、電子速控系統及安全氣袋系統)。如要獲取更多資料，請向您汽車製造商或其代表或者已添加至您汽車的裝置製造商或其代表查詢。

應僅由合格的專業人員維修裝置，或是在汽車中裝設裝置。錯誤的安裝或維修可能會產生危險，而且可能使任何適用於該裝置的保養失效。請定期檢查汽車內所有的無線裝置裝備是否安裝妥當並且操作正常。請勿將易燃液體、氣體或易爆物與裝置及其組件或增強配套置於同一汽車置物箱中。由於汽車內配備安全氣袋，請謹記會有一股巨大的力量充滿安全氣袋。請勿將物件 (包括固定及可攜式的無線裝備) 放置在安全氣袋之上或安全氣袋可伸展到的地方。如果車內的無線裝備安裝不當，在安全氣袋充氣膨脹時可能會導致嚴重傷亡的後果。

飛機

飛行中禁止使用手機。登機前請將裝置關閉。在飛機上使用無線電子裝置可能會危及飛機的操作安全、干擾無線通訊網絡，而且可能是違法的。

可能發生爆炸的環境

請在任何可能發生爆炸的場所關閉裝置，並遵守所有的告示及指示。可能發生爆炸的環境包括那些您通常會被告知要關閉交通工具引擎的地方。在這類地方產生的火花可能會造成爆炸或失火，導致身體受傷甚至死亡。在油站請關機，例如，在靠近油泵的服務站。遵守在加油站 (燃料存放及銷售區域)、化工廠或進行爆破工程的地方使用無線電裝備的限制。這類可能發生爆炸的地方通常 (但不一定) 會有清楚的標示。包括船的甲板、化學品輸送或貯存的設施、使用液化石油燃料 (例如：丙烷或丁烷) 的交通工具、空氣中含有化學物或微粒 (例如：顆粒、塵埃或金屬粉末) 的地方。

緊急電話

重要資料：本裝置，正如其他無線電話一樣，利用電波訊號、無線網絡、有線網絡及用戶可編制的功能操作。因此，無法保證在任何情況下都能連接。永遠不能僅依賴任何無線裝置進行重要的通訊 (如醫療緊急事件)。

要撥打緊急電話：

1. 如果裝置沒有開機，請先開機。檢查訊號強度是否足夠。

   有些網絡可能需將有效的 SIM 卡正確地插入裝置中。
2. 視情況按結束鍵所需次數以清除螢幕，使手機作好通話準備。
3. 輸入您目前所在位置的官方緊急號碼。緊急電話號碼視所在位置而有所不同。
4. 按通話鍵。

如果某些功能正在使用中，需要先關閉這些功能才能撥打緊急電話。請參閱本指南或向您的服務供應商查詢以獲取更多資料。

撥打緊急電話時，盡可能準確提供所有必需的資料。您的無線電話可能是發生意外情況時唯一的通訊途徑。當允許您掛掉電話時才可結束通話。

■ 證書資訊 (SAR)

本手機符合有關暴露於無線電波的國際準則

本流動電話是一部無線電收發器。其設計及製造不超出國際準則 (ICNIRP) 推薦的射頻 (RF) 暴露限制。這些限制是該準則的一部份，其中規定了普通人可接收的射頻能量等級。此準則是由獨立的科學機構經過長期全面的科學研究評估之後編寫而成。它包括了爲保障所有人 — 不論年齡與健康狀況 — 重要安全的最低要求。

流動裝置的暴露標準採用的計量單位是比吸收率 (簡稱 SAR)。國際準則中規定的 SAR 限制爲 2.0 瓦特/千克 (W/kg)* SAR 測試是以標準操作手機姿勢在所有測試頻帶中所檢定的最高功率之下進行的。儘管 SAR 是在所檢定的最高功率下測量的，但使用手機時的實際 SAR 遠低於該最大值。這是因爲手機設計有多種運作功率級別，以此只使用連接網絡所需的功率。一般而言，離無線接收站越近，手機所需輸出的功率就越低。

在耳朵旁使用手機進行測試時，本手機的最高 SAR 值爲 0.77 W/kg。

SAR 值可能視乎國際報告、測試需求和網絡帶寬而有所不同。使用裝置配件及增強配套可能會導致不同的 SAR 值。附加的 SAR 資料可能在 www.nokia.com.hk 上的產品資料中提供。

*日用流動電話的 SAR 限制爲平均每 10 克人體組織 2.0 瓦特/千克 (W/kg)。此準則融合了實際安全限度，爲公眾提供更多保護，也向公眾解釋了測量上的任何變化。SAR 值視乎國家報告要求及網絡波段而定。如需其他地區的 SAR 資料，請瀏覽 www.nokia.com 網頁中的產品資訊。

有限保證

按照以下條款和條件，諾基亞流動電話公司 (以下稱「諾基亞」) 保證該「諾基亞」流動電話產品與/或「諾基亞」所產附、配件 (以下稱「產品」) 在材料和工藝方面無缺陷：

1. 流動電話、數據產品及所有「諾基亞」所產附、配件 (電池除外) 的有限保證期爲自購買之日起十二 (12) 個月。
2. 「諾基亞」產電池的有限保證期爲自購買之日起六 (6) 個月。
3. 有限保證僅適用於「產品」的初始消費購買者 (以下稱「消費者」)，不可轉讓給後繼購買者/最終使用者。
4. 有限保證僅適用在本文件結尾處所列出的國家和地區之一購買 「產品」的 「消費者」；有限保證僅在 「諾基亞」意圖銷售 「產品」的國家和地區有效。
5. 在有限保證期間，「諾基亞」或其授權的服務網將根據 「諾基亞」的選擇，用新的或工廠重新製作的替換件，或者修理或者更換任何有缺陷的 「產品」或其一部分，並將可正常運作的 「產品」交給 「消費者」。修理或更換 「產品」時所用的零件和人工都不向 「消費者」收費。所有被更換下來的零件、電路板或設備都將成爲 「諾基亞」的財產，外殼和裝飾性的零件應在裝運時沒有缺陷，因此不包括在本有限保證條款的範圍內。
6. 經修理 「產品」的有限保證期爲原有限保證期所剩下的時間，或從修理之日起九十 (90) 天，以這兩者中較長的時間爲準。
7. 應 「諾基亞」或其授權服務中心的要求，「消費者」必須提供購買收據或其他可證明購買日期和地點的資訊。
8. 在將 「產品」運往 「諾基亞」及其授權服務中心，以及從這些地方送出的過程中的運輸、遞送和處理費用均由 「消費者」承擔。
9. 在以下任何一種情況下，「消費者」將不能受到本有限保證條款中規定的保障：
   (a) 「產品」曾受到：非正常使用、非正常情況、不當儲存、暴露在潮濕環境中、暴露在過高或過低溫度或類似環境情況下，未經授權的修改，未經授權的連線，未經授權的修理 (包括但不僅限於在修理中使用未經授權的備用零件)、誤用、疏忽、濫用、事故意外、改動、不正確的安裝、不可抗力、食物或液體濺洒，不正確地調整控制開關、或其他超出 「諾基亞」的合理控制範圍的行爲，包括消耗性零件 (如保險絲) 的缺陷和天線的斷裂或損壞，除非這些是直接由材料或工藝上的缺陷所引起的，以及 「產品」的正常磨損。
   (b) 在適用的有限保證期內，「消費者」未將關於 「產品」的缺陷或故障告知 「諾基亞」。

(c) 「產品」系列號碼或附、配件日期代碼遭去除、損毀或塗改。

(d) 缺陷或損壞是由流動電話系統在功能方面的缺陷，或是外接天線接收信號不足引起的。

(e) 與「產品」一起使用或連接起來的附、配件不是「諾基亞」提供的，或不適合與「諾基亞」流動電話一起使用，或者「產品」被用於非其意圖使用的用途。

(f) 電池短路、電池或電池單元的密封包裝被破壞，或者有人爲損壞的痕蹟，或是電池被使用在非其被指定使用的設備上。

10. 如果在有限保證期內發生問題，「消費者」應採取下列的步驟:

(a) 「消費者」應該將「產品」送回到購買的地方進行修理或更換。

(b) 如果按 (a) 項執行不方便，「消費者」應與當地的「諾基亞」辦事處聯繫，索取最近的授權服務中心的地址。

(c) 「消費者」應安排將「產品」送到授權服務中心。從裝置上拆除「產品」的相關費用並不屬於本有限保證的範圍。

(d) 如果需要不屬於本有限保證的範圍的零件與人工，「消費者」將需支付相應的費用「消費者」應負擔與重新安裝「產品」有關的費用。

(e) 如果「產品」中有某些運營商設定的功能 (如鎖定 SIM 卡)，「諾基亞」保留在提供服務前讓「消費者」詢問相關流動電話運營商的權利。

(f) 如果「產品」送回「諾基亞」時已過了有限保證期，「諾基亞」將採用其通常情況下的服務政策，並向「消費者」收取相應的費用。

11. 任何適銷性的默示保證、或是對於特定用途的適用性的默示保證，僅限於前列的有限保證期內。否則，前述有限保證條款就是購買者僅有的補償，而且取代其他所有明示的或默示的保證。「諾基亞」對於附帶的或間接的損失或預期利益或利潤的損失，談話隱私的損失或損害，以及由於使用或無法使用「產品」而導致的停工或資料的損失或損壞等情況，不承擔責任。

12. 本有限保證所提供的權益是對各國家和地區適用的強制性立法所規定的其他權利與救濟的補充。

13. 「諾基亞」不承擔，也不授權其授權服務中心或個人或實體爲其承擔，任何超出本有限保證中所明訂範圍以外的責任和義務。

14. 所有保證資訊、產品功能和規格有可能隨時修改，恕不另行通知。

15. 如上列第四條所述，本有限保證在下列國家和地區境內有效：中國香港特別行政區、中國澳門特別行政區。

索引

字母

Cookies 68
Nokia 耳機 HDC-5 80
Nokia 網上支援 xiv
PIN 碼 xii
PUK 碼 xii
SIM 服務 75
WAP 服務
  SIM 卡內的安全模組 72
  簽署文件 73

一劃

一般資料 xi

三劃

下載的內容和應用程式 xiii
下載電郵 31
下載應用程式 64
下載檔案 69
已申請的名單 42

四劃

手機 50
文字及 SMS 電郵 34
文字訊息 (SMS) 23
日曆 57

五劃

充電及放電 76
功能概覽 xi
可能發生爆炸的環境 85
外觀設定 67
打開翻蓋 1
正常操作姿勢 4
用手機按鍵瀏覽 66

六劃

共享記憶體 x
名片 41
在通話期間的選項 12
多媒體 34

多媒體訊息 (MMS) 25
多媒體資料 55
安全規定 vii
安全設定
    數碼簽名 73
安全模組 72
安裝 SIM 卡和電池 1
收件夾和其他資料夾 32
有關您的裝置 ix

七劃

佈景 46
刪除訊息 33
刪除電郵訊息 32
刪除聯絡人或聯絡人詳情 40
快取記憶體 71
快顯訊息 30
我的快捷操作 47
我的動態顯示 41
汽車 84

八劃

來電等待 12
其他安全資料 83
其他設定 36
其他應用程式選項 63
取消申請聯絡人 43
定位資料 71
服務信箱 70
服務信箱設定 70
服務指令 33

九劃

保密 53
保密碼 xi
保養及維修 81
建立日曆備註 57
待機模式 6
待機模式下的快捷操作 8
待辦事項 58
恢復原廠設定 54
按鍵及部件 5
指示符號 9
查看已申請的名單 43
爲電池充電 3
省電功能 8
計時錶 60
計算機 59

計數器及計時器 37
限制密碼 xii
音效 80
飛機 85

十劃

倒數計時器 61
個人快捷操作列表 7
時間和日期 49
書籤 68
留言訊息 33
真正的增強配套 78
記憶體已滿 28
訊息 23
訊息計數器 36
訊息設定 34
配置 52
配置設定服務 xiii

十一劃

停止響鬧 56
密碼 xi
您的手機 5
接收快顯訊息 30
接收書籤 69
接聽或拒絕來電 12
啓動遊戲 62
啓動應用程式 63
添加聯絡人至已申請的名單 43
設定 44, 46
設定瀏覽 65
通訊錄 38
    快速尋找 38
通話 49
通話功能 11
通話記錄 37
連接至服務 65
透過安全連接的指令檔 68

十二劃

備註 59
備註響鬧 57
最近通話列表 37
單鍵撥號 11, 44
尋找
    姓名及電話號碼 38
開始使用 1
開啓及關閉手機 3
集合 63

十三劃

群組 44
資料夾 29
農曆 58
遊戲 62
遊戲下載 62
遊戲設定 62
鈴聲 47
電子秘書 56
電子錢包
　通過 WAP 簽署文件 73
電池 78
電池資料 76
　類型 78
電郵 35
電郵應用程式 30

十四劃

緊急電話 85
網絡 65
網絡服務 ix

十五劃

增強配套 x, 52
廣播、服務及本手機號碼 45
廣播訊息 33
撥打電話 11
數碼簽名 73
數據連線 51
範本 25
編寫及發送 SMS 訊息 24
編寫及發送多媒體訊息 26
編寫及發送電郵 31
編寫快顯訊息 30
編輯聯絡人詳情 40
複製聯絡人 40
閱讀及回覆 SMS 訊息 24
閱讀及回覆多媒體訊息 27
閱讀及回覆電郵 32
鬧鐘 56

十六劃

操作模式 46
操作環境 83
燈光 47
螢幕 7, 48
隨插即用服務 4

十七劃

儲存姓名及電話號碼 39
儲存電話號碼、項目或圖像 39
應用程式 62
鍵盤鎖 (按鍵保護) 10

十八劃

瀏覽功能表 22
瀏覽時可用的選項 67
瀏覽網頁 66
瀏覽器安全性 71
    WAP 應用程式的安全
    模組 72
醫療裝置 83

十九劃

證書 73

Hello

Crafted to reflect your impeccable sense of style, the compact yet chic Nokia 6060 is truly sensational at every turn. The first thing you'll notice is its chic chrome finish that wraps elegantly around every curve. Adding to its aesthetic appeal is a pulsating LED display that alerts you to incoming and missed calls - a great feature to have, especially when you have your phone set on silent mode.

If you like what you see on the outside, just wait till you get to the inside! Unfold the Nokia 6060 and uncover a host of features that'll complement your contemporary lifestyle in every way. Staying in touch is easy - simply go through your 500-entry Phone Book and call, SMS or MMS your family and friends. For easier viewing on the 65,536 colours display, key in numbers or text in a larger font size, or just change the font colour to suit your taste.

There's more! Challenge your friends to your choice of downloadable Java™ games. Customise your phone display with unique wallpapers and animated screen savers. Personalise your incoming calls with the 16 pre-loaded Polyphonic Ringing Tones (MIDI). Gain access to your favourite wapsite via the high-speed xHTML browser. Or manage your social and work life with useful features like Calendar, Alarm Clock, To-do List and Expense Manager.

The Nokia 6060. So sleek, it gives a new meaning to communicating in style.

Welcome to your Nokia phone

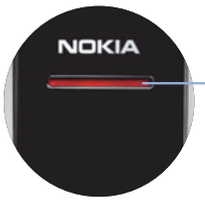

Light Emitting Display

Earpiece

Power key

- Switches the phone on and off when pressed and held for a few seconds.

End key

- Ends or rejects a call. Also exits from any function and goes to standby mode.

Selection keys

- Perform the functions indicated by the text at the bottom of the screen.
- During a call, press right selection key to activate Handsfree Loudspeaker.

4-way Navigation key

Use the keys to navigate through names, phone numbers, menus and settings; or move the cursor; or highlight in text editing.

Tip: In standby mode, press the navigation key to quickly access some functions.

- Press ◂ to create text message.
- Press ▸ to access Calendar.
- Press ▾ ▴ to access Contacts.

Volume key

- Adjusts the volume of the earpiece, loudspeaker or headset (when connected to the phone).

Call key

- Press ⌐ as a shortcut key to select the function when browsing mobile services.
- In standby mode: press ⌐ to show the most recently dialled numbers.

Voice Mailbox key

- Press and hold 1 to call your voice mailbox (network service) when the voice mailbox number is saved in the phone.

Please note that the phone screen displayed may not be the default screen setting.

DECLARATION OF CONFORMITY
We, NOKIA CORPORATION declare under our sole responsibility that the product RH-73 is in conformity with the provisions of the following Council Directive: 1999/5/EC.
A copy of the Declaration of Conformity can be found from http://www.nokia.com/phones/declaration_of_conformity/.

CE 434

Copyright © 2005 Nokia. All rights reserved.

Reproduction, transfer, distribution or storage of part or all of the contents in this document in any form without the prior written permission of Nokia is prohibited.

Nokia and Nokia Connecting People are trademarks or registered trademarks of Nokia Corporation. Other product and company names mentioned herein may be trademarks or tradenames of their respective owners.

Nokia tune is a sound mark of Nokia Corporation.

US Patent No 5818437 and other pending patents. T9 text input software Copyright © 1997-2005. Tegic Communications, Inc. All rights reserved.

Includes RSA BSAFE cryptographic or security protocol software from RSA Security.

Java is a trademark of Sun Microsystems, Inc.

Nokia operates a policy of continuous development. Nokia reserves the right to make changes and improvements to any of the products described in this document without prior notice.

English

Under no circumstances shall Nokia be responsible for any loss of data or income or any special, incidental, consequential or indirect damages howsoever caused.

The contents of this document are provided "as is". Except as required by applicable law, no warranties of any kind, either express or implied, including, but not limited to, the implied warranties of merchantability and fitness for a particular purpose, are made in relation to the accuracy, reliability or contents of this document. Nokia reserves the right to revise this document or withdraw it at any time without prior notice.

The availability of particular products may vary by region. Please check with the Nokia dealer nearest to you.

This device may contain commodities, technology or software subject to export laws and regulations from the US and other countries. Diversion contrary to law is prohibited.

Issue 1

Contents

For your safety vii

General information xi
Overview of functions xi
Access codes xi
Security code xi
PIN codes xi
PUK codes xii
Barring password xii
Configuration settings service xii
Download content and applications xiii
Nokia support on the Web xiv

1. Get started 1
Open the fold 1
Install the SIM card and battery 1
Charge the battery 3
Switch the phone on and off 3
Plug and play service 4
Normal operating position 4

2. Your phone 5
Keys and parts 5
Standby mode 7
Display 7
Personal shortcut list 7
Shortcuts in the standby mode 8
Power saving 8
Indicators 9
Keypad lock (keyguard) 10

3. Call functions 11
Make a call 11
Speed dialing 11
Answer or reject a call 12
Call waiting 12
Options during a call 13

4. Write text 14
Settings 14
Predictive text input 15
Write compound words 15
Traditional text input 15

5. Navigate the menus 17

English

6. Messages 18
Text messages (SMS)..... 18
Write and send an SMS message..... 19
Read and reply to an SMS message..... 20
Templates..... 21
Multimedia messages (MMS)..... 21
Write and send a multimedia message..... 22
Read and reply to a multimedia message..... 23
Memory full 24
Folders..... 25
Flash messages 26
Write a flash message..... 26
Receive a flash message..... 26
E-mail application 27
Write and send an e-mail 27
Download e-mail 28
Read and reply to e-mail..... 28
Inbox and other folders 29
Delete e-mail messages..... 29
Voice messages..... 29
Info messages..... 30
Service commands..... 30
Delete messages..... 30
Message settings..... 31
Text and SMS e-mail 31
Multimedia 31
E-mail..... 33
Other settings 34
Message counter 34
7. Call register 35
Recent calls lists..... 35
Counters and timers..... 35
8. Contacts 36
Search for a contact..... 36
Save names and phone numbers 36
Save numbers, items, or an image 36
Copy contacts..... 38
Edit contact details 38
Delete contacts or contact details..... 38
Business cards..... 39
My presence..... 39
Subscribed names 40
Add contacts to the subscribed names..... 41
View subscribed names..... 41
Unsubscribe a contact..... 42
Settings..... 42

Groups 42
Speed dials 42
Info, service, and my numbers 43

9. Settings 44
Profiles 44
Themes 44
Tones 45
Light 45
My shortcuts 45
Display 46
Time and date 47
Call 47
Phone 49
Connectivity 50
Enhancements 50
Configuration 51
Security 52
Restore factory settings 54

10. Gallery 55

11. Organizer 56
Alarm clock 56
Stop the alarm 56
Calendar 57
Make a calendar note 57
Note alarm 57
To-do list 58
Notes 58
Calculator 59
Stopwatch 60
Countdown timer 61

12. Applications 62
Games 62
Launch a game 62
Game downloads 62
Game settings 62
Collection 63
Launch an application 63
Other application options 63
Download an application 64

13. Web 65
Set up browsing 65
Connect to a service 65
Browse pages 66
Browse with phone keys 67
Options while browsing 67
Direct calling 67
Appearance settings 68
Cookies 69
Scripts over secure connection 69
Bookmarks 69
Receive a bookmark 70

English

Download files 70
Service inbox 71
Service inbox settings 71
Cache memory 72
Positioning information 72
Browser security 73
Security module 73
Certificates 74
Digital signature 75

14. SIM services 77

15. Battery information 78
Charging and discharging 78

16. Genuine Enhancements .. 80
Power 80
Standard Charger (ACP-7) 81
Travel Charger (ACP-12) 81
Audio 82
Nokia Headset HDC-5 82

17. Care and maintenance 83

18. Additional safety information 85

Limited Warranty 91

Index 93

For your safety

Read these simple guidelines. Not following them may be dangerous or illegal. Read the complete user guide for further information.

SWITCH ON SAFELY

Do not switch the phone on when wireless phone use is prohibited or when it may cause interference or danger.

ROAD SAFETY COMES FIRST

Obey all local laws. Always keep your hands free to operate the vehicle while driving. Your first consideration while driving should be road safety.

INTERFERENCE

All wireless phones may be susceptible to interference, which could affect performance.

SWITCH OFF IN HOSPITALS

Follow any restrictions. Switch the phone off near medical equipment.

SWITCH OFF IN AIRCRAFT

Follow any restrictions. Wireless devices can cause interference in aircraft.

SWITCH OFF WHEN REFUELING

Do not use the phone at a refueling point. Do not use near fuel or chemicals.

SWITCH OFF NEAR BLASTING

Follow any restrictions. Do not use the phone where blasting is in progress.

English

USE SENSIBLY

Use only in the normal position as explained in the product documentation. Do not touch the antenna unnecessarily.

QUALIFIED SERVICE

Only qualified personnel may install or repair this product.

ENHANCEMENTS AND BATTERIES

Use only approved enhancements and batteries. Do not connect incompatible products.

WATER-RESISTANCE

Your phone is not water-resistant. Keep it dry.

BACK-UP COPIES

Remember to make back-up copies or keep a written record of all important information stored in your phone.

CONNECTING TO OTHER DEVICES

When connecting to any other device, read its user guide for detailed safety instructions. Do not connect incompatible products.

EMERGENCY CALLS

Ensure the phone is switched on and in service. Press the end key as many times as needed to clear the display and return to the start screen. Enter the emergency number, then press the call key. Give your location. Do not end the call until given permission to do so.

About your device

The wireless device described in this guide is approved for use on the GSM 900/1800 networks. Contact your service provider for more information about networks.

When using the features in this device, obey all laws and respect the privacy and legitimate rights of others.

Warning: To use any features in this device, other than the alarm clock, the device must be switched on. Do not switch the device on when wireless device use may cause interference or danger.

Network services

To use the phone you must have service from a wireless service provider. Many of the features in this device depend on features in the wireless network to function. These network services may not be available on all networks or you may have to make specific arrangements with your service provider before you can utilize network services. Your service provider may need to give you additional instructions for their use and explain what charges will apply. Some networks may have limitations that affect how you can use network services. For instance, some networks may not support all language-dependent characters and services.

Your service provider may have requested that certain features be disabled or not activated in your device. If so, they will not appear on your device menu. Your device may also have been specially configured. This configuration may include changes in menu names, menu order and icons. Contact your service provider for more information.

This device supports WAP 2.0 protocols (HTTP and SSL) that run on TCP/IP protocols. Some features of this device, such as text messages, multimedia messages, e-mail, presence enhanced contacts, mobile Internet services, and content and application download, require network support for these technologies.

Shared memory

The phone has two memories. The following features may share the first memory: contacts, text messages, multimedia messages (but no attachments), groups, calendar, and to-do notes. The second shared memory is used by files stored in *Gallery*, attachments of multimedia messages, e-mail, and Java™ applications. Use of one or more of these features may reduce the memory available for the remaining features sharing memory. For example, saving many Java applications may use all of the available memory. Your device may display a message that the memory is full when you try to use a shared memory feature. In this case, delete some of the information or entries stored in the shared memory features before continuing. Some of the features, such as text messages, may have a certain amount of memory specially allotted to them in addition to the memory shared with other features.

Enhancements

A few practical rules about accessories and enhancements are as follows:

- Keep all accessories and enhancements out of the reach of small children.
- When you disconnect the power cord of any accessory or enhancement, grasp and pull the plug, not the cord.
- Check regularly that enhancements installed in a vehicle are mounted and are operating properly.
- Installation of any complex car enhancements must be made by qualified personnel only.

General information

Overview of functions

Your phone provides many functions that are practical for daily use, such as a calendar, clock, and alarm clock. Your phone also supports the following functions:

- Extensible hypertext markup language (XHTML) (See "Web", p. 65.)
- E-mail application (See "E-mail application", p. 27.)
- Presence-enhanced contacts (See "My presence", p. 39.)
- Java 2 Platform, Micro Edition (J2ME™) (See "Applications", p. 62.)

Access codes

Security code

The security code (5 to 10 digits) helps to protect your phone against unauthorized use. The preset code is 12345. To change the code and set the phone to request the code, see "Security", p. 53.

PIN codes

The personal identification number (PIN) code and the universal personal identification number (UPIN) code (4 to 8 digits) help to protect your SIM card against unauthorized use. See "Security", p. 53.

English

The PIN2 code (4 to 8 digits) may be supplied with the SIM card and is required for some functions.

The module PIN is required to access the information in the security module. See "Security module", p. 73.

The signing PIN is required for the digital signature. See "Digital signature", p. 75.

PUK codes

The personal unblocking key (PUK) code and the universal personal unblocking key (UPUK) code (8 digits) are required to change a blocked PIN code and UPIN code, respectively. The PUK2 code (8 digits) is required to change a blocked PIN2 code. If the codes are not supplied with the SIM card, contact your local service provider for the codes.

Barring password

The barring password (4 digits) is required when using the *Call barring service*. See "Security", p. 53.

Configuration settings service

To use some of the network services, such as mobile Internet services and MMS, your phone needs the correct configuration settings. You may be able to receive the settings directly as a configuration message. After receiving the settings you need to save them on your phone. The service provider may provide a PIN that is needed to save the settings. For more information on availability, contact your network operator, service

provider, nearest authorized Nokia dealer, or visit the support area on the Nokia Web site at www.nokia.com.hk/support.

When you have received a configuration message *Configuration sett. received* is displayed.

To save the settings, select **Show** > **Save.** If the phone requests *Enter settings' PIN:*, enter the PIN code for the settings, and select **OK.** To receive the PIN code, contact the service provider that supplies the settings. If no settings are saved yet, these settings are saved and set as default configuration settings. Otherwise, the phone asks *Activate saved configuration settings?*.

To discard the received settings, select **Exit** or **Show** > **Discard.**

To edit the settings, see "Configuration", p. 51.

Download content and applications

You may be able to download new content (for example, themes) to the phone (network service). Select the download function (for example, in the *Gallery* menu). To access the download function, see the respective menu descriptions. For the availability of different services, pricing, and tariffs, contact your service provider.

Important: Use only services that you trust and that offer adequate security and protection against harmful software.

Nokia support on the Web

Check www.nokia.com.hk/support or your local Nokia Web site for the latest version of this guide, additional information, downloads, and services related to your Nokia product.

1. Get started

Open the fold

When you open the fold of the phone, it opens up to approximately 154 degrees. Do not try to force the fold open more.

Install the SIM card and battery

Always switch the device off and disconnect the charger before removing the battery.

Keep all SIM cards out of the reach of small children. For availability and information on using SIM card services, contact your SIM card vendor. This may be the service provider, network operator, or other vendor.

This device is intended for use with the BL-5B battery.

The SIM card and its contacts can easily be damaged by scratches or bending, so be careful when handling, inserting, or removing the card.

To remove the back cover of the phone, slide the back cover to remove it from the phone (1).

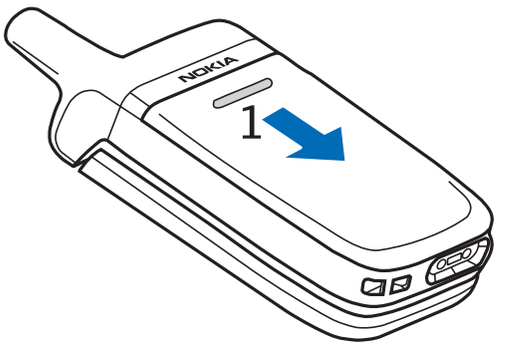

Remove the battery as shown (2). Release the SIM card holder (3).

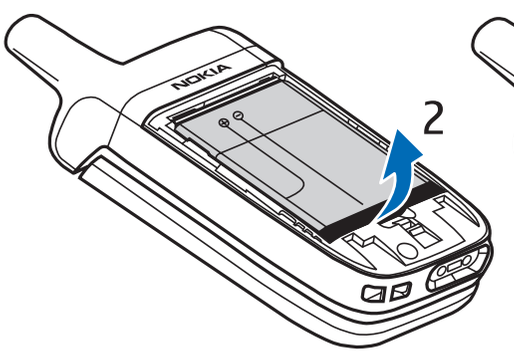

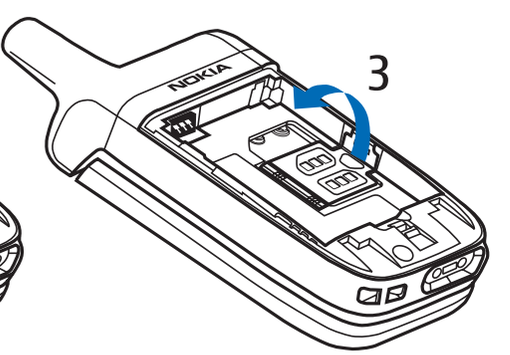

Insert the SIM card (4). Make sure that the SIM card is properly inserted, and that the golden contact area on the card is facing downwards. Close the SIM card holder (5), and press it until it snaps into position.

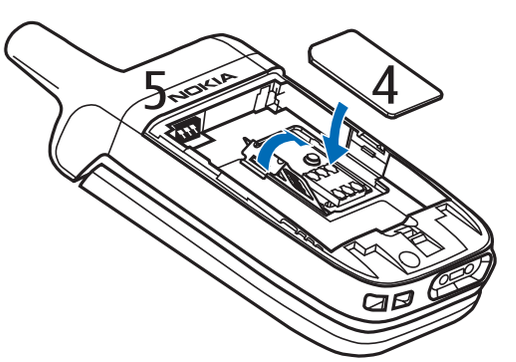

Replace the battery (6). Observe the battery contacts. Always use original Nokia batteries.

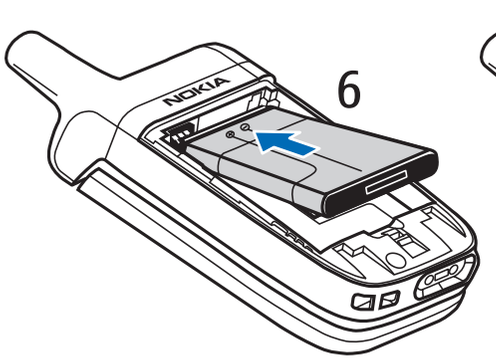

Slide the back cover into its place (7).

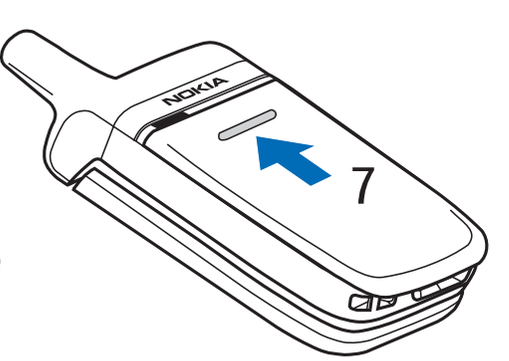

Charge the battery

Warning: Use only batteries, chargers, and enhancements approved by Nokia for use with this particular model. The use of any other types may invalidate any approval or warranty, and may be dangerous.

Check the model number of any charger before use with this device. This device is intended for use when supplied with power from the ACP-7 or ACP-12 charger provided with your phone.

For availability of approved enhancements, please check with your dealer. When you disconnect the power cord of any enhancement, grasp and pull the plug, not the cord.

1. Connect the charger to an ac wall socket.
2. Connect the lead from the charger to the socket on the bottom of your phone.

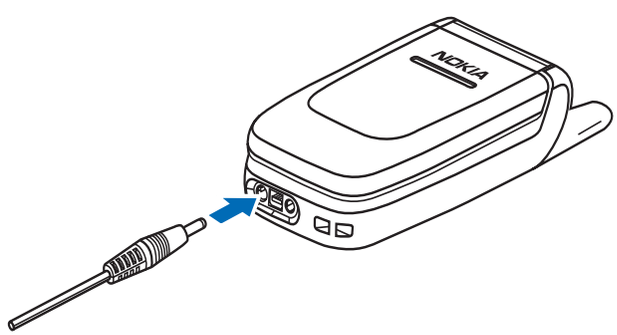

The charging time depends on the charger and the battery used.

If the battery is completely discharged, it may take a few minutes before the charging indicator appears on the display or before any calls can be made.

Switch the phone on and off

Warning: Do not switch the phone on when wireless phone use is prohibited or when it may cause interference or danger.

Press and hold the end key.

If the phone asks for a PIN or a UPIN code, enter the code (displayed as ****), and select **OK**.

Plug and play service

When you switch on your phone for the first time, and the phone is in the standby mode, you are asked to get the configuration settings from your service provider (network service). Confirm or decline the query. See *Connect to service provider support* in "Configuration", p. 51 and "Configuration settings service", p. xii.

Normal operating position

Use the phone only in its normal operating position.

Your device has an external antenna.

Note: As with any other radio transmitting device, do not touch the antenna unnecessarily when the device is switched on. Contact with the antenna affects call quality and may cause the device to operate at a higher power level than otherwise needed. Avoiding contact with the antenna area when operating the device optimizes the antenna performance and the battery life.

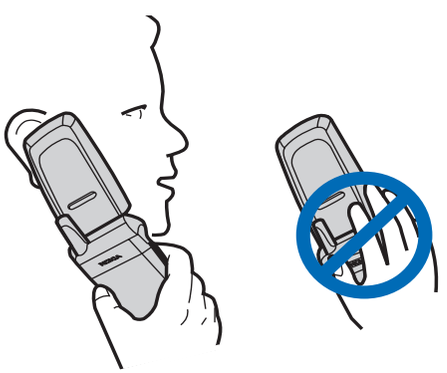

2. Your phone

Keys and parts

- Earpiece (1)
- Display (2)
- Left selection key (3)

  Middle selection key (4)

  Right selection key (5)

  The function of these keys depends on the guiding text shown on the display above the keys.
- 4-way navigation key (6)

  Scroll up, down, left, and right.
- Call key (7)
- End key and power key (8)
- Charger connector (9)
- Headset connector (10)
- Microphone (11)
- Eyelet for the wrist strap (12)

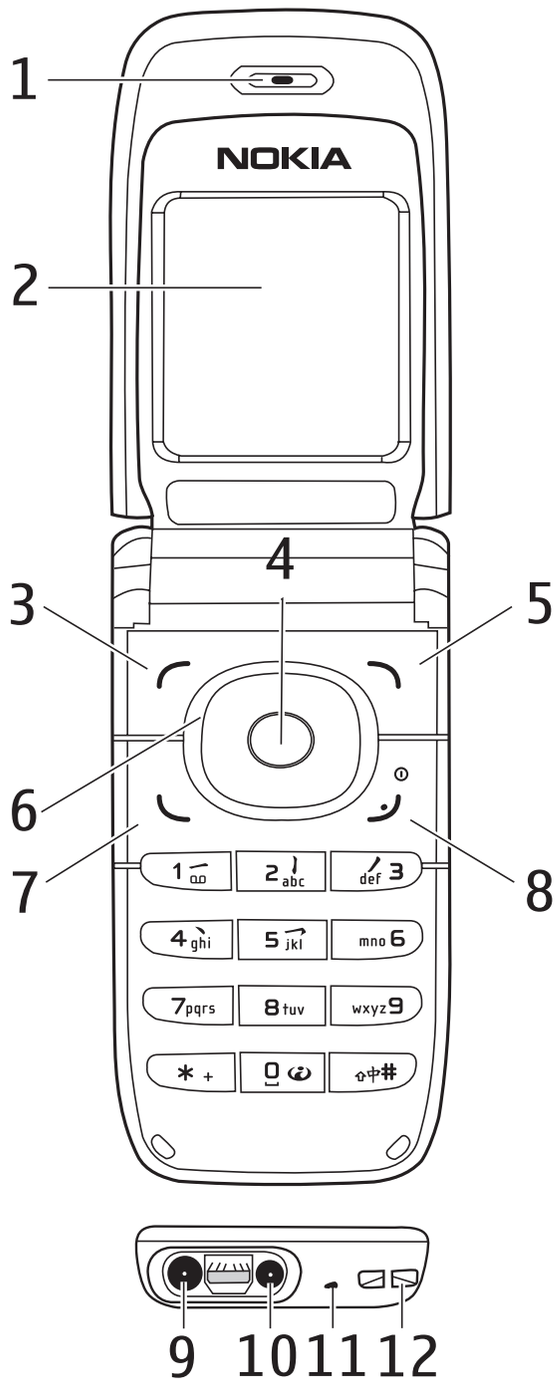

- Loudspeaker (13)
- Pulsating light (14)

  When the fold is closed, the pulsating light notifies you of the phone status (for example, an incoming call) if *Light effects* is set *On*. See "Lights", p. 45.

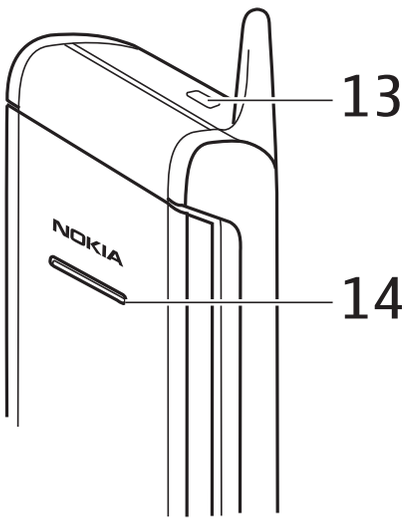

Note: Avoid touching the connector as it is intended for use by authorized service people only.

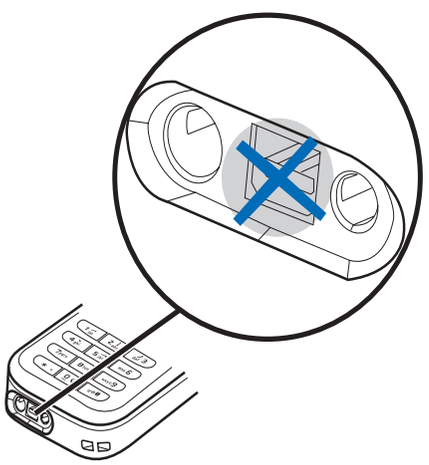

Warning: Certain parts of this device may contain nickel. Avoid prolonged contact with the skin. Continuous exposure to nickel on the skin may lead to nickel allergy.

Standby mode

When the phone is ready for use, and you have not entered any characters, the phone is in the standby mode.

Display

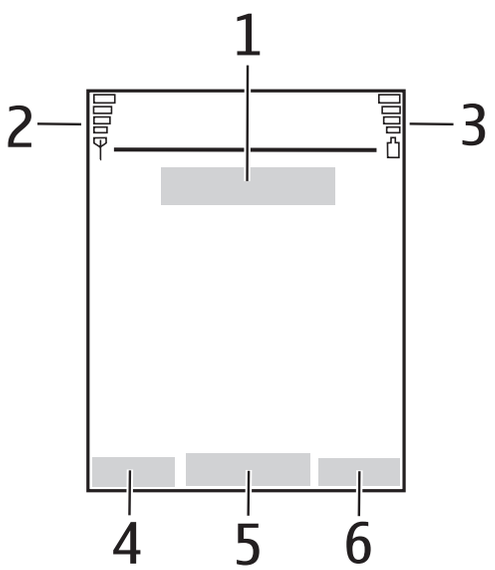

- Name of the network or the operator logo (1)
- Signal strength of the cellular network at your current location (2)
- Battery charge level (3)
- The left selection key is **Go to** (4).
- The middle selection key is **Menu** (5).
- The right selection key is **Names** (6) or another shortcut to a function that you selected. See "My shortcuts", p. 45. Operator variants may have an operator-specific name to access an operator-specific Web site.

Personal shortcut list

The left selection key is **Go to**.

To view the functions in the personal shortcut list, select **Go to**. To activate a function, select it.

To view a list with available functions, select **Go to** > **Options** > *Select options*. To add a function to the shortcut list, select **Mark.** To remove a function from the list, select **Unmark.**

To rearrange the functions on your personal shortcut list, select **Go to** > **Options** > *Organise*. Select the desired function and **Move** and the place where you want to move the function.

Shortcuts in the standby mode

- To access the list of dialed numbers, press the call key once. Scroll to the number or name that you want; and to call the number, press the call key.
- To open the Web browser, press and hold **0.**
- To call your voice mailbox, press and hold **1.**
- Use the navigation key as a shortcut. See "My shortcuts", p. 45.

Power saving

When the phone fold is opened, a digital clock view overwrites the display when no function of the phone has been used for a certain period of time. To activate the power saver, see *Power saver* in "Display", p. 46. To deactivate the screen saver, press any key.

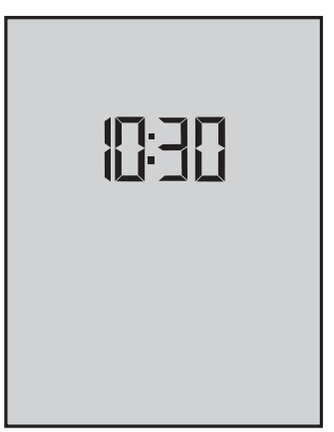

Indicators

You received one or several text or picture messages. See "Read and reply to an SMS message", p. 20.

You received one or several multimedia messages. See "Read and reply to a multimedia message", p. 20.

The phone registered a missed call. See "Call register", p. 35.

The keypad is locked. See "Keypad lock (keyguard)", p. 10.

The phone does not ring for an incoming call or text message when *Incoming call alert* and *Message alert tone* are set off. See "Tones", p. 45.

The alarm clock is set to *On*. See "Alarm clock", p. 56.

When the packet data connection mode *Always online* is selected and the packet data service is available, the indicator is shown. See "Connectivity", p. 50.

A packet data connection is established. See "Connectivity", p. 50 and "Browse pages", p. 66.

The packet data connection is suspended (on hold), for example, if there is an incoming or outgoing call during a packet data dial-up connection.

English

Keypad lock (keyguard)

To prevent the keys from being accidentally pressed, select **Menu**, and press * within 1.5 seconds to lock the keypad.

To unlock the keypad, select **Unlock**, and press *. If the *Security keyguard* is set *On*, enter the security code if requested.

To answer a call when the keyguard is on, press the call key. When you end or reject the call, the keypad automatically locks.

For *Security keyguard*, see "Phone", p. 49.

When the keyguard is on, calls still may be possible to the official emergency number programmed into your device.

3. Call functions

Make a call

1. Enter the phone number, including the area code.

   For international calls, press * twice for the international prefix (the + character replaces the international access code) and then enter the country code, the area code without the leading 0, if necessary, and the phone number.
2. To call the number, press the call key.
3. To end the call or to cancel the call attempt, press the end key, or close the phone fold.

To make a call using names, search for a name or phone number in *Contacts*. See "Search for a contact", p. 36. Press the call key to call the number.

To access the list of numbers you last called or attempted to call, press the call key once in the standby mode. To call the number, scroll to a number or name, and press the call key.

Speed dialing

Assign a phone number to one of the speed-dialing keys, **2** to **9**. See "Speed dials", p. 42. Call the number in either of the following ways:

- Press a speed-dialing key, then press the call key.

- If *Speed dialling* is set to *On*, press and hold a speed-dialing key until the call begins. See *Speed dialling* in "Call", p. 47.

Answer or reject a call

To answer an incoming call, press the call key, or open the phone fold when *Answer when fold is opened* is set *On*, see ""Call"," p. 47. To end the call, press the end key, or close the phone fold.

To reject an incoming call, press the end key, or if the phone fold is opened, close the phone fold. To reject an incoming call when the phone fold is closed, open the phone fold, and press the end key.

Tip: If the *Divert if busy* function is activated to divert the calls (for example, to your voice mailbox) rejecting an incoming call also diverts the call. See "Call", p. 47.

If a compatible headset supplied with the headset key is connected to the phone, to answer and end a call, press the headset key.

Call waiting

To answer the waiting call during an active call, press the call key. The first call is put on hold. To end the active call, press the end key.

To activate the *Call waiting* function, see "Call", p. 47.

Options during a call

Many of the options that you can use during a call are network services. For availability, contact your network operator or service provider.

During a call, select **Options** and from the following options:

Call options are *Mute* or *Unmute*, *Contacts*, *Menu*, *Lock keypad*, *Loudspeaker* or *Handset*.

Network services options are *Answer* and *Reject*, *Hold* or *Unhold*, *New call*, *Add to conference*, *End call*, *End all calls*, and the following:

Send DTMF — to send tone strings

Swap — to switch between the active call and the call on hold

Transfer — to connect a call on hold to an active call and disconnect yourself

Conference — to make a conference call that allows up to six persons to take part in a conference call

Private call —to discuss privately in a conference call

Warning: Do not hold the device near your ear when the loudspeaker is in use, because the volume may be extremely loud.

English

4. Write text

You can enter text (for example, when writing messages) using traditional or predictive text input. When using traditional text input, press a number key, 1 to 9, repeatedly until the desired character appears. In predictive text input you can enter a letter with a single keypress.

When you are writing text, predictive text input is indicated by and traditional text input by at the top left of the display. Abc, abc, or ABC appear next to the text input indicator, indicating the character case.

To change the character case and the text input mode, press **#**. 123 indicates number mode. To change from the letter to number mode, press and hold **#**, and select *Number mode*.

Settings

To set the writing language, select **Options** > *Writing language*. Predictive text input is only available for the languages listed.

Select **Options** > *Dictionary on* to set the predictive text input or *Dictionary off* to set traditional text input.

Predictive text input

Predictive text input is based on a built-in dictionary to which you can also add new words.

1. Start writing a word using the **2** to **9** keys. Press each key only once for a single letter. The word changes after each keypress.
2. When you have finished writing the word and it is correct, to confirm it, press **0** to add a space, or press any of the navigation keys. Press a navigation key to move the cursor.

   If the word is not correct, press ***** repeatedly, or select **Options** > *Matches*. When the word that you want appears, confirm it.

   If **?** is displayed after the word, the word you intended to write is not in the dictionary. To add the word to the dictionary, select **Spell**. Enter the word (traditional text input is used), and select **Save**.
3. Start writing the next word.

Write compound words

Enter the first part of the word, and press the right navigation key to confirm it. Write the last part of the word, and confirm the word.

Traditional text input

Press a number key, **1** to **9**, repeatedly until the desired character appears. Not all characters available under a number key are printed on the key. The characters available depend on the writing language. See "Settings", p. 14.

If the next letter you want is located on the same key as the present one, wait until the cursor appears, or press any of the navigation keys and enter the letter.

The most common punctuation marks and special characters are available under the **1** key.

5. Navigate the menus

The phone offers you an extensive range of functions, which are grouped into menus.

1. To access the menu, select **Menu.** To change the menu view, select **Options** > *Main menu view* > *List* or *Grid*.
2. Scroll through the menu, and select a submenu (for example, *Settings*).
3. If the menu contains submenus, select the one that you want (for example, *Call*).
4. If the selected menu contains further submenus, select the one that you want (for example, *Anykey answer*).
5. Select the setting of your choice.
6. To return to the previous menu level, select **Back.** To exit the menu, select **Exit.**

6. Messages

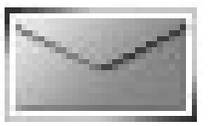

The message services can only be used if they are supported by your network or your service provider.

Note: When sending messages, your phone may display the words *Message sent*. This is an indication that the message has been sent by your device to the message center number programmed into your device. This is not an indication that the message has been received at the intended destination. For more details about messaging services, check with your service provider.

Important: Exercise caution opening messages. Messages may contain malicious software or otherwise be harmful to your device or PC.

Only devices that have compatible features can receive and display messages. The appearance of a message may vary depending on the receiving device.

Text messages (SMS)

Using the short message service (SMS) you can send and receive multipart messages made of several ordinary text messages (network service) that can contain pictures.

Before you can send any text, picture, or e-mail message, you must save your message center number. See "Message settings", p. 31.

To check SMS e-mail service availability and to subscribe to the service, contact your service provider.

Your device supports the sending of text messages beyond the character limit for a single message. Longer messages will be sent as a series of two or more messages. Your service provider may charge accordingly. Characters that use accents or other marks, and characters from some language options like Chinese, take up more space limiting the number of characters that can be sent in a single message.

At the top of the display, you can see the message length indicator that tracks the number of characters available. For example, 10/2 means that you can still add 10 characters for the text to be sent as two messages.

Write and send an SMS message

1. Select **Menu** > *Messages* > *Create message* > *Text message*.
2. Enter a message. See "Write text", p. 14. To insert text templates or a picture into the message, see "Templates", p. 21. Each picture message comprises several text messages. Sending one picture or multipart message may cost more than sending one text message.
3. To send the message, select **Send** > *Recently used*, *To phone number*, *To many*, or *To e-mail address*. To send a message using a predefined message profile, select *Via sending profile*. For the message profile, see "Text and SMS e-mail", p. 31. Select or enter a phone number or e-mail address, or select a profile.

Note: The picture message function can be used only if it is supported by your network operator or service provider. Only compatible devices that offer picture message features can receive and display picture messages. The appearance of a message may vary depending on the receiving device.

Read and reply to an SMS message

✉ is shown when you received an SMS message or an SMS e-mail. The blinking ✉ indicates that the message memory is full. Before you can receive new messages, delete some of your old messages in the *Inbox* folder.

1. To view a new message, select **Show**. To view it later, select **Exit**.

   To read the message later, select **Menu** > *Messages* > *Inbox*. If more than one message is received, select the message that you want to read. ✉ indicates an unread message.

2. While reading a message, select **Options** and delete or forward the message; edit the message as a text message or an SMS e-mail, rename the message you are reading or move it to another folder; or view or extract message details. You can also copy text from the beginning of the message to your phone calendar as a reminder note. To save the picture in the *Templates* folder when reading a picture message, select **Options** >*Save picture*.

3. To reply as a message, select **Reply** > *Text message*, *Multimedia msg.*, or *Flash message*. Enter the reply message. When replying to an e-mail, first confirm or edit the e-mail address and subject.
4. To send the message to the displayed number, select **Send** > **OK**.

Templates

Your phone has text templates and picture templates that you can use in text, picture, or SMS e-mail messages.

To access the template list, select **Menu** > *Messages* > *Saved items* > *Text messages* > *Templates*.

Multimedia messages (MMS)

A multimedia message can contain text, a picture, a calendar note, or a business card. If the message is too large, the phone may not be able to receive it. Some networks allow text messages that include an Internet address where you can view the multimedia message.

Note: Only devices that have compatible features can receive and display multimedia messages. The appearance of a message may vary depending on the receiving device.

You cannot receive multimedia messages during a call, a game, another Java application, or an active browsing session. Because delivery of multimedia messages can fail for various reasons, do not rely solely upon them for essential communications.

Write and send a multimedia message

To set the settings for multimedia messaging, see "Multimedia", p. 31. To check availability and to subscribe to the multimedia messaging service, contact your service provider.

1. Select **Menu** > *Messages* > *Create message* > *Multimedia msg.*.
2. Enter a message. See "Write text", p. 14.

   To insert a file, select **Options** > *Insert* and from the following options:

   Image — to insert a file from *Gallery*

   Sound Clip — to insert a sound file from *Gallery*

   Business card or *Calendar note* — to insert a business card or a calendar note in the message

   Slide — to insert a slide to the message. Your phone supports multimedia messages that contain several pages (slides). Each slide can contain text, one image, a calendar note, and a business card. To open a desired slide if the message contains several slides, select **Options** > *Previous slide*, *Next slide*, or *Slide list*. To set the interval between the slides, select **Options** > *Slide timing*. To move the text component to the top or bottom of the message, select **Options** > *Place text first* or *Place text last*.

   The following options may also be available: *Delete* to delete an image or slide from the message, *Clear text*, *Preview*, or *Save message*. In *More options* the following options may be available: *Insert contact*, *Insert number*, *Message details*, and *Edit subject*.

3. To send the message, select **Send** > *Recently used*, *To phone number*, *To e-mail address*, or *To many*.
4. Select the contact from the list, or enter the recipient's phone number or e-mail address, or search for it in *Contacts*. Select **OK**. The message is moved to the *Outbox* folder for sending.

   While the multimedia message is being sent, the animated indicator is displayed, and you can use other functions on the phone. If the sending fails, the phone tries to resend it a few times. If this fails, the message remains in the *Outbox* folder, and you can try to resend it later.

   If you select *Save sent messages* > *Yes*, the sent message is saved in the *Sent items* folder. See "Multimedia", p. 31. When the message is sent, it is not an indication that the message has been received at the intended destination.

Copyright protections may prevent some images, ringing tones, and other content from being copied, modified, transferred or forwarded.

Read and reply to a multimedia message

The default setting of the multimedia message service is generally on.

Important: Exercise caution when opening messages. Multimedia message objects may contain malicious software or otherwise be harmful to your device or PC.

When your phone receives a multimedia message, the animated is displayed. When the message has been received, and *Multimedia message received* are shown.

1. To read the message, select **Show.** To view it later, select **Exit.**

   To read the message later, select **Menu** > *Messages* > *Inbox*. In the list of messages, ✉ indicates an unread message. Select the message that you want to view.

2. The function of the middle selection key changes according to the currently displayed attachment in the message.

   To view the whole message if the received message contains a presentation, select **Play.**

   To zoom in on an image, select **Zoom.** To view a business card or calendar note or to open a theme object, select **Open.**

3. To reply to the message, select **Options** > *Reply* > *Text message*, *Multimedia msg.*, or *Flash message*. Enter the reply message, and select **Send.** You can send the reply message only to the person who sent you the original message.

   Select **Options** to access available options.

The wireless network may limit the size of MMS messages. If the inserted picture exceeds this limit, the device may make it smaller so that it can be sent by MMS.

Memory full

When you have received a new text message and the message memory is full, ✉ blinks and *Text msgs. memory full. Delete msgs.* is shown. Select **No**, and delete some messages from a folder. To discard the waiting message, select **Exit** > **Yes.**

When you have a new multimedia message waiting and the memory for the messages is full, ✉ blinks and *Multimedia memory full. View waiting msg.* is shown. To view the waiting message, select **Show**. Before you can save the waiting message, delete old messages to free memory space. To save the message, select **Options** > *Save message*.

To discard the waiting message, select **Exit** > **Yes.** If you select **No**, you can view the message.

Folders

The phone saves received text and multimedia messages in the *Inbox* folder.

Multimedia messages that have not yet been sent are moved to the *Outbox* folder.

If you select *Message settings* > *Text messages* > *Save sent messages* > *Yes*, and *Message settings* > *Multimedia msgs.* > *Save sent messages* > *Yes*, the sent messages are saved in the *Sent items* folder.

To save the text message that you are writing and wish to send later in the *Saved items* folder, select **Options** > *Save message* > *Saved text msgs.*. For multimedia messages, select **Options** >*Save message*. indicates unsent messages.

To organize your text messages, you can move some of them to *My folders* or add new folders for your messages. Select *Messages* > *Saved items* > *Text messages* > *My folders*.

To add a folder, select **Options** > *Add folder*. If you have not saved any folders, select **Add**.

To delete or rename a folder, scroll to the desired folder, and select **Options** > *Delete folder* or *Rename folder*.

Flash messages

Flash messages are text messages that are instantly displayed upon reception.

Write a flash message

Select **Menu** > *Messages* > *Create message* > *Flash message*. Write your message. The maximum length of a flash message is 70 characters. To insert a blinking text into the message, select *Insert blink char.* from the options list to set a marker. The text after the marker blinks until a second marker is inserted.

Receive a flash message

A received flash message is not automatically saved. To read the message, select **Read**. To extract phone numbers, e-mail addresses, user ID, and Web site addresses from the current message, select **Options** > *Use detail*. To save the message, select **Save** and the folder in which you want to save the message.

E-mail application

The e-mail application (network service) allows you to access your compatible e-mail account from your phone when you are not in the office or at home. This e-mail application is different from the SMS and MMS e-mail function.

Your phone supports POP3 and IMAP4 e-mail servers. Before you can send and retrieve any e-mail, you may need to do the following:

- Obtain a new e-mail account or use the current one. For availability of your e-mail account contact your e-mail service provider.
- For the settings required for e-mail, contact your e-mail service provider. You may receive the e-mail configuration settings as a configuration message. See "Configuration settings service", p. xii. You can also enter the settings manually. See "Configuration", p. 51.

  To activate the e-mail settings, select **Menu** > *Messages* > *Message settings* > *E-mail messages*. See "E-mail", p. 33.

Write and send an e-mail

1. Select **Menu** > *Messages* > *E-mail* > *Create e-mail*.
2. Enter the recipient's e-mail address, a subject, and the e-mail message.

   To attach a file to the e-mail, select **Options** > *Attach* and the file in *Gallery*.
3. Select *Send* > *Send now*.

Download e-mail

1. To access the e-mail application, select **Menu** > *Messages* > *E-mail*.
2. To download e-mail messages that have been sent to your e-mail account, select *Retrieve*.

   To download new e-mail messages and to send e-mail that has been saved in the *Outbox* folder, select **Options** > *Retrieve and send*.

   To download first the headings of the new e-mail messages that have been sent to your e-mail account, select **Options** > *Check new e-mail*. Then, to download the selected e-mail, mark the desired ones, and select *Options* > *Retrieve*.
3. Select the new message in *Inbox*. To view it later, select **Back**.
   indicates an unread message.

Read and reply to e-mail

Important: Exercise caution when opening messages. E-mail messages may contain malicious software or otherwise be harmful to your device or PC.

Select **Menu** > *Messages* > *E-mail* > *Inbox* and the desired message. While reading the message, select **Options** to view the available options.

To reply to an e-mail, select **Reply** > *Empty screen* or *Original text*. To reply to many, select **Options** > *Reply to all*. Confirm or edit the e-mail address and subject; then write your reply. To send the message, select **Send** > *Send now*.

Inbox and other folders

Your phone saves e-mail that you have downloaded from your e-mail account in the *Inbox* folder. *Other folders* contains the following folders: *Drafts* for saving unfinished e-mail, *Archive* for organizing and saving your e-mail, *Outbox* for saving e-mail that has not been sent, and *Sent items* for saving e-mail that has been sent.

To manage the folders and their e-mail content, select **Options** > *Manage folder*.

Delete e-mail messages

Select **Menu** > *Messages* > *E-mail* > **Options** > *Manage folder* and the desired folder. Mark the messages that you want to delete. To delete them, select **Options** > *Delete*.

Deleting an e-mail from your phone does not delete it from the e-mail server. To set the phone to delete the e-mail also from the e-mail server, select *Menu* > *Messages* > *E-mail* > **Options** > *Extra settings* > *Leave copy:* > *Delete retr. msgs*.

Voice messages

The voice mailbox is a network service and you may need to subscribe to it. For details, contact your service provider.

To call your voice mailbox, select **Menu** > *Messages* > *Voice messages* > *Listen to voice messages*. To enter, search for, or edit your voice mailbox number, select *Voice mailbox number*.

If supported by the network, indicates that there are new voice messages. Select **Listen** to call your voice mailbox number.

Info messages

Select **Menu** > *Messages* > *Info messages*. With the *Info messages* network service, you can receive messages on various topics from your service provider. To check availability, topics, and the relevant topic numbers, contact your service provider.

Service commands

Select **Menu** > *Messages* > *Service commands*. Write and send service requests (also known as USSD commands) to your service provider, such as activation commands for network services.

Delete messages

To delete all messages from a folder, select **Menu** > *Messages* > *Delete messages* and the folder from which you want to delete the messages. Select *Yes*, and if the folder contains unread messages, the phone asks whether you want to delete them also. Select *Yes* again.

Message settings

Text and SMS e-mail

The message settings affect the sending, receiving, and viewing of messages.

Select **Menu** > *Messages* > *Message settings* > *Text messages* and from the following options:

Sending profile — If more than one message profile set is supported by your SIM card, select the set you want to change.
The following options may be available: *Message centre number* (delivered from your service provider), *Messages sent via*, *Message validity*, *Default recipient number* (text messages) or *E-mail server* (e-mail), *Delivery reports*, *Use packet data*, *Reply via same centre* (network service), and *Rename sending profile*.

Save sent messages > *Yes* — Set the phone to save the sent text messages in the *Sent items* folder.

Automatic resending > *On* — The phone automatically attempts to resend a text message, if the sending has failed.

Multimedia

The message settings affect the sending, receiving, and viewing of multimedia messages.

Select **Menu** > *Messages* > *Message settings* > *Multimedia msgs.* and from the following options:

Save sent messages > *Yes* — to set the phone to save sent multimedia messages in the *Sent items* folder

Delivery reports — to ask the network to send delivery reports about your messages (network service)

Scale image down — to define the image size when you insert an image to a multimedia message

Default slide timing — to define the default time between slides in multimedia messages

Allow multimedia reception > *Yes* or *No* — to receive or to block the multimedia message. If you select *In home network*, you cannot receive multimedia messages when outside your home network.

Incoming multimedia messages > *Retrieve*, *Retrieve manually*, or *Reject* — to allow the reception of multimedia messages automatically, manually after being prompted, or to reject the reception

Configuration settings > *Configuration* — Only the configurations that support multimedia messaging are shown. Select a service provider, *Default*, or *Personal config.* for multimedia messaging. Select *Account* and a multimedia messaging service account contained in the active configuration settings.

Allow adverts — to receive or reject advertisements. This setting is not shown if *Allow multimedia reception* is set to *No*.

E-mail

The settings affect the sending, receiving, and viewing of e-mail.

You may receive the configuration settings for the e-mail application as a configuration message. See "Configuration settings service", p. xii. You can also enter the settings manually. See "Configuration", p. 51.

To activate the settings for the e-mail application, select **Menu** > *Messages* > *Message settings* > *E-mail messages* and from the following options:

Configuration — Select the set that you want to activate.

Account — Select an account provided by the service provider.

My name — Enter your name or nickname.

E-mail address — Enter your e-mail address.

Include signature — You can define a signature that is automatically added to the end of your e-mail when you write your message.

Reply-to address — Enter the e-mail address to which you want the replies to be sent.

SMTP user name — Enter the name that you want to use for outgoing mail.

SMTP password — Enter the password that you want to use for outgoing mail.

Incoming server type — Select *POP3* or *IMAP4*, depending on the type of e-mail system that you use. If both types are supported, select *IMAP4*.

Incoming mail settings — Select available options for POP3 or IMAP4.

Other settings

To select other settings for messages, select **Menu** > *Messages* > *Message settings* > *Other settings*. To change the font size for reading and writing messages, select *Font size*. To replace character-based smileys with graphical ones, select *Graphical smileys* > *Yes*.

Message counter

Select **Menu** > *Messages* > *Message counter* for approximate information on your recent communications.

7. Call register

The phone registers the phone numbers of identified missed, received, and dialed calls; the message recipients; and the approximate length of your calls.

The phone registers if it is switched on and within the network service area, and the network supports these functions.

Recent calls lists

When you select **Options** in the *Missed calls*, *Received calls*, *Dialled numbers*, or *Message Recipients* menu, you can view the time of the call; edit, view, or call the registered phone number; add it to the memory; or delete it from the list. You can also send a text message. To delete the recent calls lists, select *Delete recent calls*.

Counters and timers

Note: The actual invoice for calls and services from your service provider may vary, depending upon network features, rounding-off for billing, taxes, and so forth.

Some timers, including the life timer, may be reset during service or software upgrades.

Select **Menu** > *Call register* > *Call duration*, *Packet data counter*, or *Packet data conn. timer* for approximate information on your recent communications.

8. Contacts

You can save names and phone numbers (*Contacts*) in the phone memory and SIM card memory.

The phone memory may save contacts with numbers and text items. You can also save an image for a certain number of names.

Names and numbers saved in the SIM card memory are indicated by .

Search for a contact

Select **Menu** > *Contacts* > *Names* > **Options** > *Search*. Scroll through the list of contacts, or enter the first letter of the name for which you are searching.

Save names and phone numbers

Names and numbers are saved in the used memory. Select **Menu** > *Contacts* > *Names* > **Options** > *Add new contact*. Enter the name and the phone number.

Save numbers, items, or an image

In the phone memory for contacts, you can save different types of phone numbers and short text items per name.

The first number you save is automatically set as the default number. It is indicated with a frame around the number type indicator (for example,). When you select a name (for example, to make a call), the default number is used unless you select another number.

1. Make sure that the memory in use is *Phone* or *Phone and SIM*.
2. Scroll to the name to which you want to add a new number or text item, and select **Details** > **Options** > *Add detail*.
3. To add a number, select *Number* and a number type.

   To add another detail, select a text type or an image from *Gallery*.

   To search for an ID from the server of your service provider if you have connected to the presence service, select *User ID* > *Search*. See "My presence", p. 39. If only one ID is found, it is automatically saved. Otherwise, to save the ID, select **Options** > *Save*. To enter the ID, select *Enter ID manually*.

   To change the number type, scroll to the desired number, and select **Options** > *Change type*. To set the selected number as the default number, select *Set as default*.
4. Enter the number or text item; to save it, select **OK**.
5. To return to the standby mode, select **Back** > **Exit**.

Copy contacts

Search for the contact you want to copy, and select **Options** > *Copy*. You can copy names and phone numbers from the phone contact memory to the SIM card memory, or vice versa. The SIM card memory can save names with one phone number attached to them.

Edit contact details

1. Search for the contact you want to edit, select **Details**, and scroll to the desired name, number, text item, or image.
2. To edit a name, number, or text item, or to change an image, select **Options** > *Edit name*, *Edit number*, *Edit detail*, or *Change image*.

   You cannot edit an ID when it is on the *IM contacts* or *Subscribed names* list.

Delete contacts or contact details

To delete all the contacts and the details attached to them from the phone or SIM card memory, select **Menu** > *Contacts* > *Delete all contacts* > *From phone mem.* or *From SIM card*. Confirm with the security code.

To delete a contact, search for the desired contact, and select **Options** > *Delete contact*.

To delete a number, text item, or an image attached to the contact, search for the contact, and select **Details.** Scroll to the desired detail, and select **Options** > *Delete* > *Delete number*, *Delete detail*, or *Delete image*. Deleting an image from contacts does not delete it from *Gallery*.

Business cards

You can send and receive a person's contact information from a compatible device that supports the vCard standard as a business card.

To send a business card, search for the contact whose information you want to send, and select **Details** > **Options** > *Send bus. card* > *Via multimedia* or *Via text message*.

When you have received a business card, select **Show** > **Save** to save the business card in the phone memory. To discard the business card, select **Exit** > **Yes.**

My presence

With the presence service (network service) you can share your presence status with other users with compatible devices and access to the service. Presence status includes your availability, status message, and personal logo. Other users who have access to the service and who request your information are able to see your status. The requested information is shown in *Subscribed names* in the viewers' *Contacts* menu. You can personalize the information that you want to share with others and control who can see your status.

Before you can use presence, you must subscribe to the service. To check the availability and costs, and to subscribe to the service, contact your network operator or service provider, from whom you also receive your unique ID, password, and the settings for the service. See "Configuration", p. 51.

While you are connected to the presence service, you can use the other functions of the phone; the presence service is active in the background. If you disconnect from the service, your presence status is shown for a certain amount of time to viewers, depending on the service provider.

Select **Menu** > *Contacts* > *My presence* and from the following options:

Connect to 'My presence' service or *Disconnect from service* — to connect to or disconnect from the service

View my presence — to view the status in *Private pres.* and *Public presence*

Edit my presence — to change your presence status. Select *My availability*, *My presence message*, *My presence logo*, or *Show to*.

My viewers > *Current viewers*, *Private list*, or *Blocked list*

Settings > *Show current presence in idle*, *Synchronise with profiles*, *Connection type*, or *Presence settings*

Subscribed names

You can create a list of contacts whose presence status information you want to be aware of. You can view the information if it is allowed by the contacts and the network. To view these subscribed names, scroll through the contacts or use the *Subscribed names* menu.

Make sure that the memory in use is *Phone* or *Phone and SIM*.

To connect to the presence service, select **Menu** > *Contacts* > *My presence* > *Connect to 'My presence' service*.

Add contacts to the subscribed names

1. Select **Menu** > *Contacts* > *Subscribed names*.
2. If you have no contacts on your list, select **Add**. Otherwise, select **Options** > *Subscribe new*. The list of your contacts is shown.
3. Select a contact from the list, and if the contact has a saved user ID, the contact is added to the subscribed names list.

View subscribed names

To view the presence information, see "Search for a contact", p. 36.

1. Select **Menu** > *Contacts* > *Subscribed names*.

   The status information of the first contact on the subscribed names list is displayed. The information that the person wants to give to the others may include text and some of the following icons:

   , , or indicates that the person is available, busy, or not available.

   indicates that the person's presence information is not available.
2. Select **Details** to view the details of the selected contact; or select **Options** > *Subscribe new*, *Send message*, *Send bus. card*, or *Unsubscribe*.

English

Unsubscribe a contact

To unsubscribe a contact from the *Contacts* list, select the contact and **Details** > the user ID > **Options** > *Unsubscribe* > **Yes.**

To unsubscribe, use the **Subscribed names** menu. See "View subscribed names", p. 41.

Settings

Select **Menu** > *Contacts* > *Settings* and from the following options:

Memory in use — to select the SIM card or phone memory for your contacts

Contacts view — to select how the names and numbers in contacts are displayed

Memory status — to view the free and used memory capacity

Groups

Select **Menu** > *Contacts* > *Groups* to arrange the names and phone numbers saved in the memory into caller groups with different ringing tones and group images.

Speed dials

To assign a number to a speed-dialing key, select **Menu** > *Contacts* > *Speed dials*, and scroll to the speed-dialing number that you want.

Select *Assign*, or if a number has already been assigned to the key, select **Options** > *Change*. Select **Search**, the name, then the number you want to assign. If the *Speed dialling* function is off, the phone asks whether you want to activate it. See also *Speed dialling* in "Call", p. 47.

To make a call using the speed-dialing keys, see "Speed dialing", p. 11.

Info, service, and my numbers

Select **Menu** > *Contacts* and from the following functions:

Info numbers — to call the information numbers of your service provider if the numbers are included on your SIM card (network service)

Service numbers — to call the service numbers of your service provider if the numbers are included on your SIM card (network service)

My numbers — to view the phone numbers assigned to your SIM card if the numbers are included on your SIM card

9. Settings

Profiles

Your phone has various setting groups, called profiles, for which you can customize the phone tones for different events and environments.

Select **Menu** > *Settings* > *Profiles*. Scroll to a profile, and select it.

To activate the selected profile, select *Activate*.

To set the profile to be active until a certain time up to 24 hours, select *Timed* and set the time the profile setting shall end. When the time set for the profile expires, the previous profile that was not timed becomes active.

To personalize the profile, select *Personalise*. Select the setting you want to change, and make the changes. To change your presence status information, select *My presence* > *My availability* or *My presence message*. The *My presence* menu is available if you set *Synchronise with profiles* to *On*. See "My presence", p. 39.

Themes

A theme contains many elements for personalizing your phone, such as wallpaper, screen saver, color scheme, and a ringing tone (your phone supports MP3 format ringing tone).

Select **Menu** > *Settings* > *Themes* and from the following options:

Select theme — to set a theme in your phone. A list of folders in *Gallery* opens. Open the *Themes* folder, and select a theme.

Theme downloads — to open a list of links to download more themes. See "Download files", p. 70.

Tones

You can change the settings of the selected active profile.

Select **Menu** > *Settings* > *Tones*. Select and change *Incoming call alert*, *Ringing tone*, *Ringing volume*, *Vibrating alert*, *Message alert tone*, *Instant message alert tone*, *Keypad tones*, and *Warning tones*. You can find the same settings in the *Profiles* menu. See "Profiles", p. 44.

To set the phone to ring only for calls from phone numbers that belong to a selected caller group, select *Alert for*. Scroll to the caller group you want or *All calls*, and select **Mark**.

Lights

To set the pulsating light on to inform your phone status changes when the fold is closed, select **Menu** > *Settings* > *Lights* > *Light effects* > *On*.

My shortcuts

With personal shortcuts, you get quick access to often used functions of the phone. To manage the shortcuts, select **Menu** > *Settings* > *My shortcuts* and from the following options:

Right selection key — to select a function from the list for the right selection key. See also "Standby mode", p. 7. This menu may not be shown, depending on your service provider.

Navigation key — to select shortcut functions for the navigation key. Scroll to the desired navigation key, and select **Change** and a function from the list. To remove a shortcut function from the key, select *(empty)*. To reassign a function for the key, select **Assign**. This menu may not be shown, depending on your service provider.

Display

Select **Menu** > *Settings* > *Display* and from the following options:

Wallpaper — to add the background image to the display in the standby mode. To select, activate, or deactivate the wallpaper, select *Select wallpaper*, *On* or *Off*. Select *Select slide set* and a folder in the *Gallery* to use the images in the folder as a slide set. To download more images for wallpaper, select *Graphic downloads*.

Screen saver > *On* — to activate the screen saver for the display. To set the time after which the screen saver is activated, select *Time-out*. To select a graphic for the screen saver, select *Screen savers* > *Image* and choose an image or a graphic from the *Gallery*. To download more images for the screen saver, select *Graphic downloads*.

Power saver > *On* — to save some battery power. A digital clock is displayed when no function of the phone is used for a certain time.

Colour schemes — to change the color in some display components, for example, menu background color and signal and battery bar colors

Idle state font colour — to select the color for the texts on the display in the standby mode

Operator logo — to set your phone to display or hide the operator logo. The menu is dimmed if you have not saved the operator logo. For more information on availability of an operator logo, contact your network operator or service provider.

Time and date

Select **Menu** > *Settings* > *Time and date* and from the following options:

Clock — to set the phone to show the clock in the standby mode, adjust the clock, and select the time zone and the time format

Date — to set the phone to show the date in the standby mode, set the date, and select the date format and date separator

Auto-update of date & time (network service) — to set the phone to automatically update the time and date according to the current time zone

Call

Select **Menu** > *Settings* > *Call* and from the following options:

Call divert (network service) — to divert your incoming calls. You may not be able to divert your call, if some call barring functions are active. See *Call barring service* in "Security", p. 53.

Anykey answer > *On* — to answer an incoming call, briefly press any key, except the end key and the left and right selection keys.

Answer when fold is opened > *On* — to answer an incoming call directly when you open the phone fold.

Automatic redial > *On* — to set your phone to make a maximum of 10 attempts to connect the call after an unsuccessful call attempt

Speed dialling > *On* — to activate speed dialling. To set up speed dialling, see "Speed dials", p. 42. To dial, press and hold the corresponding number key.

Call waiting > *Activate* — to set the network to notify you of an incoming call while you have a call in progress (network service). See "Call waiting", p. 12.

Summary after call > *On* — to briefly display the approximate duration and cost (network service) of the call after each call

Send my caller ID (network service) > *Set by network* or *Yes*, *No*

Line for outgoing calls (network service) — to select the phone line 1 or 2 to make calls, if supported by your SIM card

Phone

Select **Menu** > *Settings* > *Phone* and from the following options:

Phone language — to set the display language

Memory status — to view the free memory and the used memory in *Gallery*, *Messages*, and *Applications*

Security keyguard — to set the phone to ask for the security code when you unlock the keyguard. Enter the security code, confirm it and select *On*.

When the keyguard is on, calls still may be possible to the official emergency number programmed into your device.

Cell info display > *On* — to receive information from the network operator depending on the network cell used (network service)

Welcome note — to enter a welcome note to be shown briefly when the phone is switched on

Operator selection > *Automatic* — to set the phone automatically to select one of the cellular networks available in your area. With *Manual*, you can select a network that has a roaming agreement with your home network operator.

Confirm SIM service actions — See "SIM services", p. 77.

Help text activation — to select whether the phone shows help texts

Start-up tone — to select whether the phone plays a start-up tone when the phone is switched on

Connectivity

General packet radio service (GPRS) is a network service that allows mobile phones to be used for sending and receiving data over an Internet Protocol (IP)-based network. GPRS is a data bearer that enables wireless access to data networks such as the Internet.

The applications that may use GPRS are MMS, browsing, and Java application downloading.

Before you can use GPRS technology, contact your network operator or service provider for availability of and subscription to the GPRS service. Save the GPRS settings for each of the applications used over GPRS. For information on pricing, contact your network operator or service provider.

Select **Menu** > *Settings* > *Connectivity* > *Packet data* > *Packet data connection* to establish an GPRS connection.

To set the phone to automatically register to an GPRS network when you switch on the phone, select *Always online*.

To set the phone to register to an GPRS network and establish a connection when an application needs it, and end the connection when you end the application, select *When needed*.

Enhancements

This menu is shown only if the phone is or has been connected to a compatible mobile enhancement.

Select **Menu** > *Settings* > *Enhancements*. You can select an enhancement menu if the corresponding enhancement is, or has been, connected to the phone. Depending on the enhancement, select from the following options:

Default profile — to select the profile that you want to be automatically activated when you connect to the selected enhancement

Automatic answer — to set the phone to answer an incoming call automatically after 5 seconds. If *Incoming call alert* is set to *Beep once* or *Off*, automatic answer is off.

Text phone > *Use text phone* > *Yes* — to use the text phone settings instead of headset or loopset settings

Configuration

You can configure your phone with settings that are required for certain services to function correctly. The services are browser, multimedia messaging, presence, and e-mail application. Get the settings from your SIM card, from a service provider as a configuration message, or enter your personal settings manually.

To save the configuration settings received by a configuration message from a service provider, see "Configuration settings service", p. xii.

Select **Menu** > *Settings* > *Configuration* and from the following options:

Default configuration settings — to view the service providers saved in the phone. Scroll to a service provider, and select **Details** to view the applications that the configuration settings of this service provider support. To set the configuration settings of the service provider as default settings, select **Options** > *Set as default*. To delete configuration settings, select *Delete*.

Activate default in all applications — to activate the default configuration settings for supported applications

Preferred access point — to view the saved access points. Scroll to an access point, and select **Options** > *Details* to view the name of the service provider, data bearer, and packet data access point .

Connect to service provider support — to download the configuration settings from your service provider

Personal configuration settings — to add new personal accounts for various services manually, and to activate or delete them. To add a new personal account if you have not added any, select **Add new**; otherwise, select **Options** > *Add new*. Select the service type, and select and enter each of the required parameters. The parameters differ according to the selected service type. To delete or activate a personal account, scroll to it, and select **Options** > *Delete* or *Activate*.

Security

When security features that restrict calls are in use (such as call barring, closed user group, and fixed dialing) calls still may be possible to the official emergency number programmed into your device.

Select **Menu** > *Settings* > *Security* and from the following options:

PIN code request — to set the phone to ask for your PIN or UPIN code every time the phone is switched on. Some SIM cards do not allow the code request to be turned off.

Call barring service (network service) — to restrict incoming calls to and outgoing calls from your phone. A barring password is required.

Fixed dialling — to restrict your outgoing calls to selected phone numbers if this function is supported by your SIM card

Closed user group (network service) — to specify a group of people whom you can call and who can call you

Security level > *Phone* — the phone asks for the security code whenever a new SIM card is inserted into the phone. Select *Memory* and the phone asks for the security code when SIM card memory is selected and you want to change the memory in use.

Access codes — to set the PIN code or UPIN code in use or to change the security code, PIN code, UPIN code, PIN2 code, and barring password

Code in use — to select whether the PIN code or UPIN code should be active

Pin2 code request — to select whether the PIN2 code is required when using a specific phone feature which is protected by the PIN2 code

Restore factory settings

To reset some of the menu settings to their original values, select **Menu** > *Settings* > *Restore factory sett.*. Enter the security code. The data you have entered or downloaded is not deleted, for example, the names and phone numbers saved in *Contacts*.

10. Gallery

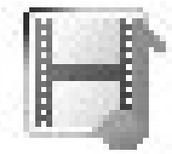

In this menu you can manage graphics, images, themes, and tones. These files are arranged in folders.

Your phone supports an activation key system to protect acquired content. Always check the delivery terms of any content and activation key before acquiring them, as they may be subject to a fee.

Copyright protections may prevent some images, ringing tones, and other content from being copied, modified, transferred, or forwarded.

To see the list of folders, select **Menu** > *Gallery*.

To see the available options of a folder, select a folder > **Options.**

To view the list of files in a folder, select a folder > **Open.**

To see the available options of a file, select a file > **Options.**

Some of the files may be protected by an activation key.

To update the activation key of the selected file, select **Options** > *Activate content*. The option is only shown if the activation key updating is supported by the file.

To view the list of all available activation keys, select **Options** > *Activation key list*. You can delete the activation keys (for example, delete the expired ones).

11. Organizer

Alarm clock

You can set the phone to alarm at a desired time. Select **Menu** > *Organiser* > *Alarm clock*.

To set the alarm, select *Alarm time*, and enter the alarm time. To change the alarm time when the alarm time is set, select *On*. To set the phone to alert you on selected days of the week, select *Repeat alarm*.

To select the alarm tone, select *Alarm tone*.

To set a snooze time-out, select *Snooze time-out*.

Stop the alarm

The phone sounds an alert tone, and flashes *Alarm!* and the current time on the display, even if the phone was switched off. To stop the alarm, select **Stop**. If you let the phone continue to sound the alarm for a minute or select **Snooze**, the alarm stops for the selected snooze time-out and then resumes.

If the alarm time is reached while the device is switched off, the device switches itself on and starts sounding the alarm tone. If you select **Stop**, the device asks whether you want to activate the device for calls. Select **No** to switch off the device or **Yes** to make and receive calls. Do not select **Yes** when wireless phone use may cause interference or danger.

Calendar

Select **Menu** > *Organiser* > *Calendar*.

The current day is indicated by a frame. If there are any notes set for the day, the day is in bold type. To view the day notes, select **View**. To view a week, select **Options** > *Week view*. To delete all notes in the calendar, select the month or week view, and select **Options** > *Delete all notes*.

Other options for the day view may be *Make a note*, *Delete*, *Edit*, *Move*, or *Repeat* a note; *Copy* a note to another day; *Send note* as a text message, as a multimedia message, or to the calendar of another compatible phone. In *Settings* you can set the date and time settings. In *Auto-delete notes* you can set the phone to delete old notes automatically after a specified time.

Make a calendar note

Select **Menu** > *Organiser* > *Calendar*. Scroll to the date you want, and select **Options** > *Make a note* and one of the following note types: *Meeting*, *Call*, *Birthday*, *Memo*, or *Reminder*.

Note alarm

The phone beeps and displays the note. With a call note on the display, to call the displayed number, press the call key. To stop the alarm and to view the note, select **View**. To stop the alarm for approximately 10 minutes, select **Snooze**. To stop the alarm without viewing the note, select **Exit**.

To-do list

To save notes for tasks that you must do, select **Menu** > *Organiser* > *To-do list*.

To create a note if no note is added, select **Add note**; otherwise, select **Options** > *Add*. Write the note, and select **Save**. Select the priority, the deadline, and the alarm type for the note.

To view a note, scroll to it, and select **View**.

You can also select an option to delete the selected note and delete all the notes that you have marked as done. You can sort the notes by priority or by deadline, send a note to another phone as a text message or a multimedia message, save a note as a calendar note, or access the calendar.

While viewing a note, you can also select an option to edit the deadline or priority for the note or mark the note as done.

Notes

To use this application for writing and sending notes, select **Menu** > *Organiser* > *Notes*. To create a note if no note is added, select **Add note**; otherwise, select **Options** > *Make a note*. Write a note, and select **Save**.

Other options for notes include deleting and editing a note. While editing a note, you can also exit the text editor without saving the changes. You can send the note to compatible devices using a text message or multimedia message.

Calculator

The calculator in your phone adds, subtracts, multiplies, divides, calculates the square and the square root, and converts currency values.

Note: This calculator has limited accuracy and is designed for simple calculations.

Select **Menu** > *Organiser* > *Calculator*. When 0 is displayed on the screen, enter the first number in the calculation. Press the # key for a decimal point. Select **Options** > *Add*, *Subtract*, *Multiply*, *Divide*, *Square*, *Square root*, or *Change sign*. Enter the second number. For a total, select **Equals**. Repeat this sequence as many times as it is necessary. To start a new calculation, first select and hold **Clear**.

To perform a currency conversion, select **Menu** > *Organiser* > *Calculator*. To save the exchange rate, select **Options** > *Exchange rate*. Select either of the displayed options. Enter the exchange rate, press the # key for a decimal point, and select **OK**. The exchange rate remains in the memory until you replace it with another one. To perform the currency conversion, enter the amount to be converted, and select **Options** > *In domestic* or *In foreign*.

Note: When you change base currency, you must enter the new rates because all previously set exchange rates are set to zero.

Stopwatch

To measure time, take intermediate times, or take lap times, use the stopwatch. During timing, the other functions of the phone can be used. To set the stopwatch timing in the background, press the end key.

English

Using the stopwatch or allowing it to run in the background when using other features increases the demand on battery power and reduces the battery life.

Select **Menu** > *Organiser* > *Stopwatch* and from the following options:

Split timing — to take intermediate times. To start the time observation, select **Start**. Select **Split** every time that you want to take an intermediate time. To stop the time observation, select **Stop**. To save the measured time, select **Save**. To start the time observation again, select **Options** > *Start*. The new time is added to the previous time. To reset the time without saving it, select *Reset*. To set the stopwatch timing in the background, press the end key.

Lap timing — to take lap times. To set the stopwatch timing in the background, press the end key.

Continue — to view the timing that you have set in the background

Show last — to view the most recently measured time if the stopwatch is not reset

View times or *Delete times* — to view or delete the saved times

Countdown timer

Select **Menu** > *Organiser* > *Countdown Timer*. Enter the alarm time in hours, minutes, and seconds, and select **OK**. If you wish, write your own note text that is displayed when the time expires. To start the countdown timer, select *Start*. To change the countdown time, select *Change time*. To stop the timer, select *Stop timer*.

If the alarm time is reached when the phone is in the standby mode, the phone sounds a tone and flashes the note text if it is set or *Countdown time up*. To stop the alarm, press any key. If no key is pressed, the alarm automatically stops within 60 seconds. To stop the alarm and to delete the note text, select **Exit**. To restart the countdown timer, select **Restart**.

12. Applications

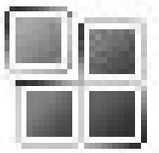

Games

Your phone software includes some games.

Launch a game

Select **Menu** > *Applications* > *Games*. Scroll to the desired game, and select **Open**.

For options related to a game, see "Other application options", p. 63.

Game downloads

Select *Menu* > *Applications* > **Options** > *Downloads* > *Game downloads*. The list of available bookmarks is shown. Select *More bookmarks* to access the list of bookmarks in the *Web* menu. See "Bookmarks", p. 69.

Important: Only install and use applications and other software from sources that offer adequate security and protection against harmful software.

Game settings

To set sounds, lights, and shakes for the game, select *Menu* > *Applications* > **Options** > *App. settings*.

Collection

Your phone software includes some Java applications specially designed for this Nokia phone.

Launch an application

Select **Menu** > *Applications* > *Collection*. Scroll to an application, and select **Open**.

Other application options

Delete — to delete the application or application set from the phone

Details — to view additional information about the application

Update version — to check if a new version of the application is available for download from *Web* (network service)

App. access — to restrict the application from accessing the network. Different categories are shown. Select in each category, if available, one of the following permissions: *Ask every time* to set the phone to always ask for network access, *Ask first time only* to set the phone to ask for network access only on the first attempt, *Always allowed* to allow the network access, or *Not allowed* to not allow the network access.

Web page — to provide further information or additional data for the application from an Internet page. This feature must be supported by the network. It is only shown if an Internet address has been provided with the application.

Download an application

Your phone supports J2ME Java applications. Make sure that the application is compatible with your phone before downloading it.

Important: Only install and use applications and other software from sources that offer adequate security and protection against harmful software.

You can download new Java applications in different ways.

Select **Menu** > *Applications* > **Options** > *Downloads* > *App. downloads*. The list of available bookmarks is shown. Select *More bookmarks* to access the list of bookmarks in the *Web* menu. Select the appropriate bookmark to connect to the desired page. For the availability of different services, pricing, and tariffs, contact your service provider.

Select **Menu** > *Web* > *Downloads*. Download an appropriate application or game. See "Download files", p. 70.

Use the game download function. See "Game downloads", p. 62.

Your device may have some bookmarks loaded for sites not affiliated with Nokia. Nokia does not warrant or endorse these sites. If you choose to access them, you should take the same precautions, for security or content, as you would with any Internet site.

13. Web

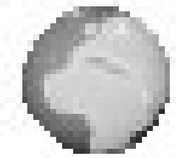

You can access various mobile Internet services with your phone browser.

Important: Use only services that you trust and that offer adequate security and protection against harmful software.

Check the availability of these services, pricing, tariffs, and instructions with your service provider.

With the phone browser you can view the services that use wireless markup language (WML) or extensible hypertext markup language (XHTML) on their pages. Appearance may vary due to screen size. You may not be able to view all details of the Internet pages.

Set up browsing

You may receive the configuration settings required for browsing as a configuration message from the network operator or service provider that offers the service that you want to use. See "Configuration settings service", p. xii. You can also enter all the configuration settings manually. See "Configuration", p. 51.

Connect to a service

First, verify that the correct configuration settings of the service that you want to use are activated.

1. To select the settings for connecting to the service, select **Menu** > *Web* > *Settings* > *Configuration settings*.
2. Select *Configuration*. Only the configurations that support browsing service are shown. Select a service provider, *Default*, or *Personal config.* for browsing. See "Set up browsing", p. 65.

   Select *Account* and a browsing service account contained in the active configuration settings.

Secondly, make a connection to the service in one of the following ways:

- Select **Menu** > *Web* > *Home*; or in the standby mode, press and hold **0**.
- To select a bookmark of the service, select **Menu** > *Web* > *Bookmarks*.
- To select the last URL, select **Menu** > *Web* > *Last web address*.
- To enter the address of the service, select **Menu** > *Web* > *Go to address*, enter the address of the service, and select **OK**.

Browse pages

After you make a connection to the service, you can start browsing its pages. The function of the phone keys may vary in different services. Follow the text guides on the phone display. For more information, contact your service provider.

If packet data is selected as the data bearer, G is shown on the top left of the display during browsing. If you receive a call or a text message, or make a call during a packet data connection, G is shown on the top right of the display to indicate that the packet data connection is suspended (on hold). After a call the phone tries to reconnect the packet data connection.

Browse with phone keys

Use the navigation keys to browse through the page.

To select a highlighted item, press the call key, or select **Select**.

To enter letters and numbers, press the **0** to **9** keys. To enter special characters, press ***.

Options while browsing

Home, *Shortcuts*, *Add bookmark*, *Bookmarks*, *Page options*, *History*, *Downloads*, *Other options*, *Save to folder*, *Reload*, and *Quit* may be available. The service provider may also offer other options.

Direct calling

The browser may support functions that you can access while browsing. You can make a phone call, send DTMF tones while a voice call is in progress, and save a name and a phone number from a page.

Appearance settings

While browsing, select **Options** > *Other options* > *Appear. settings*; or in the standby mode, select **Menu** > *Web* > *Settings* > *Appearance settings* and from the following options:

Text wrapping > *On* — to set the text to continue on the next line on the display. If you select *Off*, the text is abbreviated.

Font size > *Extra small*, *Small*, or *Medium* — to set the font size

Show images > *No* — to hide pictures on the page. This can speed up the browsing of pages that contain a lot of pictures.

Alerts > *Alert for unsecure connection* > *Yes* — to set the phone to alert when an encrypted connection changes to unencrypted during browsing.

Alerts > *Alert for unsecure items* > *Yes* — to set the phone to alert when an encrypted page contains an unsecure item. These alerts do not guarantee a secure connection. For more information, see "Browser security", p. 73.

Character encoding > *Content encoding* — to select the encoding for the browser page content

Character encoding > *Unicode (UTF-8) web addresses* > *On* — to set the phone to send a URL as a UTF-8 encoding. You may need this setting when you access a Web page created in a foreign language.

Screen Size > *Full* or *Small* — to set the screen size

Cookies

A cookie is data that a site saves in the cache memory of your phone. Cookies are saved until you clear the cache memory. See "Cache memory", p. 72.

While browsing, select **Options** > *Other options* > *Security* > *Cookie settings*; or in the standby mode, select **Menu** > *Web* > *Settings* > *Security settings* > *Cookies*. To allow or prevent the phone from receiving cookies, select *Allow* or *Reject*.

Scripts over secure connection

You can select whether to allow the running of scripts from a secure page. The phone supports WML scripts.

1. While browsing, select **Options** > *Other options* > *Security* > *Script settings*; or in the standby mode, select **Menu** > *Web* > *Settings* > *Security settings* > *Scripts over secure connection*.
2. To allow the scripts, select *Allow*.

Bookmarks

You can save page addresses as bookmarks in the phone memory.

1. While browsing, select **Options** > *Bookmarks*; or in the standby mode, select **Menu** > *Web* > *Bookmarks*.
2. Scroll to a bookmark, and select it; or press the call key to make a connection to the page associated with the bookmark.

3. Select **Options** to view, edit, delete, or send the bookmark; create a new bookmark; or save the bookmark to a folder.

Your device may have some bookmarks loaded for sites not affiliated with Nokia. Nokia does not warrant or endorse these sites. If you choose to access them, you should take the same precautions, for security or content, as you would with any Internet site.

Receive a bookmark

When you have received a bookmark that is sent as a bookmark, *1 bookmark received* is displayed. To save the bookmark, select **Show** > **Save**. To view or delete the bookmark, select **Options** > *View* or *Delete*. To discard the bookmark directly after you have received the bookmark, select **Exit** > **OK**.

Download files

To download more tones, images, games, or applications to your phone (network service), select **Menu** > *Web* > *Downloads* > *Tone downloads*, *Graphic downloads*, *Game downloads*, *Theme downloads*, or *App. downloads*.

Important: Only install and use applications and other software from sources that offer adequate security and protection against harmful software.

To save all downloaded files automatically in the appropriate folders in *Gallery* or in *Applications*, select **Menu** > *Web* > *Settings* > *Downloading settings* > *Automatic saving* > *On*.

Service inbox

The phone is able to receive service messages (pushed messages) sent by your service provider (network service). Service messages are notifications (for example, news headlines), and they may contain a text message or an address of a service.

To access the *Service inbox* in the standby mode, when you have received a service message, select **Show**. If you select **Exit**, the message is moved to the *Service inbox*. To access the *Service inbox* later, select **Menu** > *Web* > *Service inbox*.

To access the *Service inbox* while browsing, select **Options** > *Other options* > *Service inbox*. Scroll to the message you want, and to activate the browser and download the marked content, select **Retrieve**. To display detailed information on the service notification or to delete the message, select **Options** > *Details* or *Delete*.

Service inbox settings

Select **Menu** > *Web* > *Settings* > *Service inbox settings*.

To set whether you want to receive service message, select *Service messages* > *On* or *Off*.

To set the phone to receive service messages only from content authors approved by the service provider, select *Message filter* > *On*. To view the list of the approved content authors, select *Trusted channels*.

To set the phone to automatically activate the browser from the standby mode when the phone has received a service message, select *Automatic connection* > *On*. If you select *Off*, the phone activates the browser only after you select *Retrieve* when the phone has received a service message.

Cache memory

A cache is a memory location that is used to store data temporarily. If you have tried to access or have accessed confidential information requiring passwords, empty the cache after each use. The information or services you have accessed is stored in the cache.

To empty the cache, while browsing, select **Options** > *Other options* > *Clear the cache*; in the standby mode, select **Menu** > *Web* > *Clear the cache*.

Positioning information

The network may send you a location request. You can ensure that the network delivers location information of your phone only if you approve it (network service). Contact your network operator or service provider to subscribe and to agree upon the delivery of location information.

To accept or reject the location request, select **Accept** or **Reject**. If you miss the request, the phone automatically accepts or rejects it according to what you have agreed with your network operator or service provider. The phone displays *1 missed position request*. To view the missed location request, select **Show**.

To view the information on the 10 most recent privacy notifications and requests or to delete them, select **Menu** > *Web* > *Positioning* > *Position log* > *Open folder* or *Delete all*.

Browser security

Security features may be required for some services, such as online banking or shopping. For such connections you need security certificates and possibly a security module, which may be available on your SIM card. For more information, contact your service provider.

Security module

The security module improves security services for applications requiring a browser connection, and allows you to use a digital signature. The security module may contain certificates as well as private and public keys. The certificates are saved in the security module by the service provider.

Select **Menu** > *Web* > *Settings* > *Security settings* > *Security module settings* and from the following options:

Security module details — to show the security module title, status, manufacturer, and serial number

Module PIN request — to set the phone to ask for the module PIN when using services provided by the security module. Enter the code, and select *On*. To disable the module PIN request, select *Off*.

Change module PIN — to change the module PIN, if allowed by the security module. Enter the current module PIN code, then enter the new code twice.

Change signing PIN — to change the signing PIN code for the digital signature. Select the signing PIN you want to change. Enter the current PIN code, then enter the new code twice.

See also "Access codes", p. xi.

Certificates

Important: Note that even if the use of certificates makes the risks involved in remote connections and software installation considerably smaller, they must be used correctly in order to benefit from increased security. The existence of a certificate does not offer any protection by itself; the certificate manager must contain correct, authentic, or trusted certificates for increased security to be available. Certificates have a restricted lifetime. If Expired certificate or Certificate not valid yet is shown even if the certificate should be valid, check that the current date and time in your device are correct.

Before changing any certificate settings, you must make sure that you really trust the owner of the certificate and that the certificate really belongs to the listed owner.

There are three kinds of certificates: server certificates, authority certificates, and user certificates. You may receive these certificates from your service provider. Authority certificates and user certificates may also be saved in the security module by the service provider.

To view the list of the authority or user certificates downloaded into your phone, select **Menu** > *Web* > *Settings* > *Security settings* > *Authority certificates* or *User certificates*.

The security indicator is displayed during a connection, if the data transmission between the phone and the content server is encrypted.

The security icon does not indicate that the data transmission between the gateway and the content server (or place where the requested resource is stored) is secure. The service provider secures the data transmission between the gateway and the content server.

Digital signature

You can make digital signatures with your phone if your SIM card has a security module. Using the digital signature is similar to signing your name to a paper bill, contract, or other document.

To make a digital signature, select a link on a page, for example, the title of the book you want to buy and its price. The text to sign, which may include the amount and date, is shown.

Check that the header text is *Read* and that the digital signature icon is shown.

If the digital signature icon does not appear, there is a security breach, and you should not enter any personal data such as your signing PIN.

To sign the text, read all of the text first, and select **Sign**.

The text may not fit within a single screen. Therefore, make sure to scroll through and read all of the text before signing.

Select the user certificate you want to use. Enter the signing PIN (see "Access codes", p. xi), and select **OK**. The digital signature icon disappears, and the service may display a confirmation of your purchase.

14. SIM services

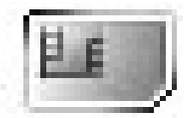

Your SIM card may provide additional services that you can access. This menu is shown only if it is supported by your SIM card. The name and contents of the menu depend on the SIM card.

For availability and information on using SIM card services, contact your SIM card vendor. This may be the service provider, network operator, or other vendor.

To set the phone to show you the confirmation messages sent between your phone and the network when you are using the SIM services, select **Menu** > *Settings* > *Phone* > *Confirm SIM service actions* > *Yes*.

Accessing these services may involve sending messages or making a phone call for which you may be charged.

15. Battery information

Charging and discharging

Your device is powered by a rechargeable battery. The full performance of a new battery is achieved only after two or three complete charge and discharge cycles. The battery can be charged and discharged hundreds of times but it will eventually wear out. When the talk and standby times are noticeably shorter than normal, replace the battery. Use only Nokia approved batteries, and recharge your battery only with Nokia approved chargers designated for this device.

Unplug the charger from the electrical plug and the device when not in use. Do not leave a fully charged battery connected to a charger, since overcharging may shorten its lifetime. If left unused, a fully charged battery will lose its charge over time.

Use the battery only for its intended purpose. Never use any charger or battery that is damaged.

Do not short-circuit the battery. Accidental short-circuiting can occur when a metallic object such as a coin, clip, or pen causes direct connection of the positive (+) and negative (-) terminals of the battery. (These look like metal strips on the battery.) This might happen, for example, when you carry a spare battery in your pocket or purse. Short-circuiting the terminals may damage the battery or the connecting object.

Leaving the battery in hot or cold places, such as in a closed car in summer or winter conditions, will reduce the capacity and lifetime of the battery and its ability to charge. Always try to keep the battery between 15°C and 25°C (59°F and 77°F). A device with a hot or cold battery may not work temporarily, even when the battery is fully charged. Battery performance is particularly limited in temperatures well below freezing.

Do not dispose of batteries in a fire as they may explode. Batteries may also explode if damaged. Dispose of batteries according to local regulations. Please recycle when possible. Do not dispose as household waste.

16. Genuine Enhancements

A new extensive range of enhancements is available for your phone. Select the enhancements which accommodate your specific communication needs.

Some of the enhancements are described in detail below.

For availability of the enhancements, please check with your local dealer. A few practical rules for enhancements operation:

- Keep the enhancements out of small children's reach.
- When you disconnect the power cord of any accessory, grasp and pull the plug, not the cord.
- Check regularly that all mobile phone equipment in a vehicle is mounted and operating properly.

Use only batteries, chargers and enhancements approved by the phone manufacturer. The use of any other types may invalidate any approval or warranty applying to the phone, and may be dangerous.

Power

Type	Tech	Talktime*	Standby*
BL-5B	Li-ion	Up to 2.5 to 3.5 hrs	Up to 120 to 400 hrs

* Variation in operation times may occur depending on SIM card, network and usage settings, usage style and environments. Use of FM radio and integrated hands-free will affect talktime and standby.

Standard Charger (ACP-7)

Small, lightweight and durable charger ACP-7 provides and easy and convenient way to charge the phone. It is easy to connect to phone or desktop stand.

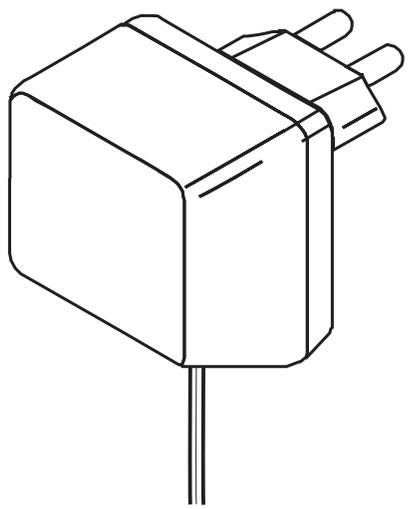

Note: The plug types vary according to different markets.

Travel Charger (ACP-12)

Small, lightweight travel charger with multi voltage (100 - 240V) switcher technology. Provides easy and convenient way to charge the phone.

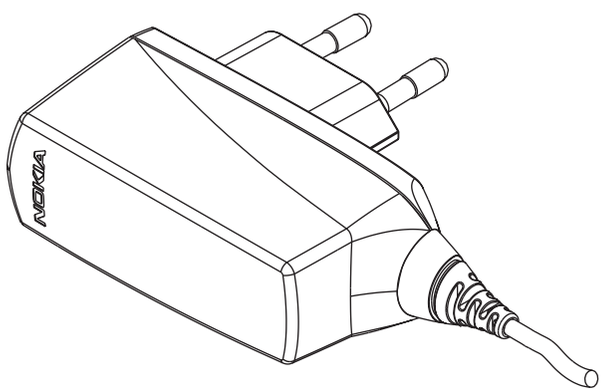

Note: The plug types vary according to different markets.

Audio

Nokia Headset HDC–5

For easy and simple operation this headset is provided with a remote control.

17. Care and maintenance

Your device is a product of superior design and craftsmanship and should be treated with care. The suggestions below will help you protect your warranty coverage.

- Keep the device dry. Precipitation, humidity and all types of liquids or moisture can contain minerals that will corrode electronic circuits. If your device does get wet, remove the battery and allow the device to dry completely before replacing it.
- Do not use or store the device in dusty, dirty areas. Its moving parts and electronic components can be damaged.
- Do not store the device in hot areas. High temperatures can shorten the life of electronic devices, damage batteries, and warp or melt certain plastics.
- Do not store the device in cold areas. When the device returns to its normal temperature, moisture can form inside the device and damage electronic circuit boards.
- Do not attempt to open the device other than as instructed in this guide.
- Do not drop, knock, or shake the device. Rough handling can break internal circuit boards and fine mechanics.
- Do not use harsh chemicals, cleaning solvents, or strong detergents to clean the device.
- Do not paint the device. Paint can clog the moving parts and prevent proper operation.
- Use only the supplied or an approved replacement antenna. Unauthorized antennas, modifications, or attachments could damage the device and may violate regulations governing radio devices.

- Use chargers indoors.
- Always create a backup of data you want to keep (such as contacts and calendar notes) before sending your device to a service facility.

All of the above suggestions apply equally to your device, battery, charger, or any enhancement. If any device is not working properly, take it to the nearest authorized service facility for service.

18. Additional safety information

Your device and its enhancements may contain small parts. Keep them out of the reach of small children.

Operating environment

Remember to follow any special regulations in force in any area and always switch off your device when its use is prohibited or when it may cause interference or danger. Use the device only in its normal operating positions. This device meets RF exposure guidelines when used either in the normal use position against the ear or when positioned at least 2.2 cm away from the body. When a carry case, belt clip or holder is used for body-worn operation, it should not contain metal and should position the device the above-stated distance from your body.

In order to transmit data files or messages, this device requires a good quality connection to the network. In some cases, transmission of data files or messages may be delayed until such a connection is available. Ensure the above separation distance instructions are followed until the transmission is completed.

Parts of the device are magnetic. Metallic materials may be attracted to the device. Do not place credit cards or other magnetic storage media near the device, because information stored on them may be erased.

Medical devices

Operation of any radio transmitting equipment, including wireless phones, may interfere with the functionality of inadequately protected medical devices. Consult a physician or the manufacturer of the medical device to determine if they are adequately shielded from external RF energy or if you have any questions. Switch off your device in health care facilities when any regulations posted in these areas

instruct you to do so. Hospitals or health care facilities may be using equipment that could be sensitive to external RF energy.

Pacemakers

Pacemaker manufacturers recommend that a minimum separation of 15.3 centimeters (6 inches) be maintained between a wireless phone and a pacemaker to avoid potential interference with the pacemaker. These recommendations are consistent with the independent research by and recommendations of Wireless Technology Research. Persons with pacemakers should do the following:

- Always keep the device more than 15.3 centimeters (6 inches) from the pacemaker
- Not carry the device in a breast pocket
- Hold the device to the ear opposite the pacemaker to minimize the potential for interference.

If you suspect interference, switch off your device, and move the device away.

Hearing aids

Some digital wireless devices may interfere with some hearing aids. If interference occurs, consult your service provider.

Vehicles

RF signals may affect improperly installed or inadequately shielded electronic systems in motor vehicles such as electronic fuel injection systems, electronic antiskid (antilock) braking systems, electronic speed control systems, and air bag systems. For more information, check with the manufacturer, or its representative, of your vehicle or any equipment that has been added.

Only qualified personnel should service the device, or install the device in a vehicle. Faulty installation or service may be dangerous and may invalidate any warranty that may apply to the device. Check regularly that all wireless device equipment in your vehicle is mounted and operating properly. Do not store or carry flammable liquids, gases, or explosive materials in the same compartment as the device, its parts, or enhancements. For vehicles equipped with an air bag, remember that air bags inflate with great force. Do not place objects, including installed or portable wireless equipment in the area over the air bag or in the air bag deployment area. If in-vehicle wireless equipment is improperly installed and the air bag inflates, serious injury could result.

Airplanes

Using your device while flying in aircraft is prohibited. Switch off your device before boarding an aircraft. The use of wireless teledevices in an aircraft may be dangerous to the operation of the aircraft, disrupt the wireless telephone network, and may be illegal.

Potentially explosive environments

Switch off your device when in any area with a potentially explosive atmosphere and obey all signs and instructions. Potentially explosive atmospheres include areas where you would normally be advised to turn off your vehicle engine. Sparks in such areas could cause an explosion or fire resulting in bodily injury or even death. Switch off the device at refueling points such as near gas pumps at service stations. Observe restrictions on the use of radio equipment in fuel depots, storage, and distribution areas, chemical plants or where blasting operations are in progress. Areas with a potentially explosive atmosphere are often but not always clearly marked. They include below deck on boats, chemical transfer or storage facilities, vehicles using liquefied petroleum gas (such as propane or butane), and

areas where the air contains chemicals or particles such as grain, dust, or metal powders.

Emergency calls

Important: Wireless phones, including this device, operate using radio signals, wireless networks, landline networks, and user-programmed functions. Because of this, connections in all conditions cannot be guaranteed. You should never rely solely on any wireless device for essential communications like medical emergencies.

To make an emergency call:

1. If the device is not on, switch it on. Check for adequate signal strength.

   Some networks may require that a valid SIM card is properly inserted in the device.
2. Press the end key as many times as needed to clear the display and ready the device for calls.
3. Enter the official emergency number for your present location. Emergency numbers vary by location.
4. Press the call key.

If certain features are in use, you may first need to turn those features off before you can make an emergency call. Consult this guide or your service provider for more information.

When making an emergency call, give all the necessary information as accurately as possible. Your wireless device may be the only means of communication at the scene of an accident. Do not end the call until given permission to do so.

Certification information (SAR)

THIS DEVICE MEETS INTERNATIONAL GUIDELINES FOR EXPOSURE TO RADIO WAVES

Your mobile device is a radio transmitter and receiver. It is designed and manufactured not to exceed the limits for exposure to radio frequency (RF) recommended by international guidelines (ICNIRP). These limits are part of comprehensive guidelines and establish permitted levels of RF energy for the general population. The guidelines were developed by independent scientific organizations through periodic and thorough evaluation of scientific studies. The guidelines include a substantial safety margin designed to assure the safety of all persons, regardless of age and health.

The exposure standard for mobile devices employs a unit of measurement known as the Specific Absorption Rate, or SAR. The SAR limit stated in the international guidelines is 2.0 watts/kilogram (W/kg)*. Tests for SAR are conducted using standard operating positions with the device transmitting at its highest certified power level in all tested frequency bands. Although the SAR is determined at the highest certified power level, the actual SAR of the device while operating can be well below the maximum value. This is because the device is designed to operate at multiple power levels so as to use only the power required to reach the network. In general, the closer you are to a base station, the lower the power output of the device.

The highest SAR value for this device when tested for use at the ear is 0.77 W/kg.

SAR values may vary depending on national reporting and testing requirements and the network band. Use of device accessories and enhancements may result in different SAR values. Additional SAR information may be provided under product information at www.nokia.com.hk.

* The SAR limit for mobile devices used by the public is 2.0 W/kg averaged over 10 grams of body tissue. The guidelines incorporate a substantial margin of safety to give additional protection for the public and to account for any variations in measurements. SAR values may vary depending on national reporting requirements and the network band. For SAR information in other regions, please look under product information at www.nokia.com.hk.

Limited Warranty

Nokia Corporation, represented by its Mobile Phones Division ("Nokia") warrants that this Nokia cellular product and/or genuine Nokia accessory ("Product") is free from defects in material and workmanship, according to the following terms and conditions:

1. The limited warranty for the cellular phone, data product and all genuine Nokia accessories (except battery packs) extends for the first twelve (12) months beginning on the date of purchase of the Product.
2. The limited warranty for genuine Nokia battery packs extends for the first six (6) months beginning on the date of purchase of the Product.
3. The limited warranty extends only to the original consumer purchaser ("Consumer") of the Product and is not assignable or transferable to any subsequent purchaser/end user.
4. The limited warranty extends only to Consumers who purchase the Product in one of the countries (or areas) set forth at the end of this document. The limited warranty is only valid in Nokia's intended country (or area) of sale of the Product.
5. During the limited warranty period, Nokia or its authorized service network will repair or replace, at Nokia's option, any defective Product or parts thereof with new or factory rebuilt replacement items, and return the Product to the Consumer in working condition. No charge will be made to the Consumer for either parts or labor in repairing or replacing the Product. All replaced parts, boards or equipment shall become property of Nokia. The external housing and cosmetic parts shall be free of defects at the time of shipment and, therefore, shall not be covered under these limited warranty terms.
6. Repaired Product will be warranted for the balance of the original warranty period or for ninety (90) days from the date of repair, whichever is longer.
7. Upon request from Nokia or its authorized service center, the Consumer must provide purchase receipt or other information to prove the date and place of purchase.
8. Transportation, delivery and handling charges incurred in the transport of the Product to and from Nokia or its authorized service center will be borne by the Consumer.
9. The Consumer shall have no coverage or benefits under this limited warranty if any of the following conditions are applicable :
   a) The Product has been subject to: abnormal use, abnormal condition, improper storage, exposure to moisture or dampness, exposure to excessive temperature or other such environmental conditions, unauthorized modifications, unauthorized connections, unauthorized repair including but not limited to use of unauthorized spare parts in repairs, misuse, neglect, abuse, accident, alteration, improper installation, Acts of God, spill of foods or liquids, maladjustment of customer controls or other acts which are beyond of reasonable control of Nokia, including deficiencies in consumable parts such as fuses and breakage or damage to antennas, unless caused directly by defects in materials or workmanship, and normal wear and tear of the Product.
   b) Nokia was not notified by Consumer of the alleged defect or malfunction of the Product during the applicable limited warranty period.

c) The Product serial number or the accessory date code has been removed, defaced or altered.

d) The defect or damage was caused by defective function of the cellular system or by inadequate signal reception by the external antenna.

e) The Product was used with or connected to accessory not supplied by Nokia, not fit for use with Nokia cellular phones or used in other than its intended use.

f) The battery was short circuited or seals of the battery enclosure or cells are broken or show evidence of tampering or the battery was used in equipment other that for which is has been specified.

10. If a problem develops during the limited warranty period, the Consumer should take the following step-by-step procedure:

a) The Consumer shall return the Product to the place of purchase for repair or replacement processing.

b) If "a" is not convenient, the Consumer may contact the local Nokia office for the location of the nearest authorized service center.

c) The Consumer shall arrange for the Product to be delivered to the authorized service center. Expenses related to removing the Product from an installation are not covered under this limited warranty.

d) The Consumer will be billed for any parts or labor charges not covered by this limited warranty. The Consumer shall be responsible for expenses related to reinstallation of the Product.

e) In case of certain operator specific features in the Product such as SIM-lock, Nokia reserves the right to refer the Consumer to the relevant cellular operator before service will be provided.

f) If the Product is returned to Nokia after the expiration of the warranty period, Nokia's normal service policies shall apply and the Consumer will be charged accordingly.

11. ANY IMPLIED WARRANTY OF MECHANTABILITY, OR FITNESS FOR A PARTICULAR PURPOSE OR USE, SHALL BE LIMITED TO THE DURATION OF THE FOREGOING WRITTEN WARRANTY. OTHERWISE, THE FOREGOING WARRANTY IS THE PURCHASER'S SOLE AND EXCLUSIVE REMEDY AND IS IN LIEU OF ALL OTHER WARRANTIES, EXPRESS OR IMPLIED. NOKIA SHALL NOT BE LIABLE FOR INCIDENTAL OR CONSEQUENTIAL DAMAGES OR A LOSS OF ANTICIPATED BENEFITS OR PROFITS, LOSS OR IMPAIRMENT OF PRIVACY OF CONVERSATIONS, WORK STOPPAGE OR LOSS OR IMPAIRMENT OF DATA ARISING OUT OF THE USE OR INABILITY TO USE THE PRODUCT.
12. The benefits conferred by this limited warranty are in addition to all other rights and remedies under any applicable mandatory legislation as may be in force from country (or area) to country (or area).
13. Nokia neither assumes nor authorizes any authorized service center or any person or entity to assume for it any other obligation or liability beyond that which is expressly provided for in this limited warranty.
14. All warranty information, product features and specifications are subject to change without notice.
15. The countries (or areas) in which this limited warranty is in force, subject to clause 4 above, are Hong Kong SAR and Macau SAR.

Index

A

About your device viii
Access codes xi
Add contacts to the subscribed names 41
Additional safety information 85
Airplanes 87
Alarm clock 56
Answer or reject a call 12
Appearance settings 68
Applications 62
Audio 82

B

Barring password xii
Battery 80
Battery information 78
    type 80
Bookmarks 69
Browse pages 66
Browse with phone keys 67
Browser security 73
browser security
    security module for WAP applications 73
Business cards 39

C

Cache memory 72
Calculator 59
Calendar 57
Call 47
Call functions 11
Call register 35
Call waiting 12
Care and maintenance 83
Certificates 74
Certification information (SAR) 89
Charge the battery 3
Charging and discharging 78
Collection 63
Configuration 51
Configuration settings service xii
Connect to a service 65
Connectivity 50
Contacts 36
Cookies 69
Copy contactse 38
Countdown timer 60
Counters and timers 35

English

D

Delete contacts or contact details 38
Delete e-mail messages 29
Delete messages 30
Digital signature 75
Display 7, 46
Download an application 64
Download content and applications xiii
Download e-mail 28
Download files 70

E

Edit contact details 38
E-mail 33
E-mail application 27
Emergency calls 88
Enhancements x, 50

F

Flash messages 26
Folders 25
For your safety vii

G

Gallery 55
Game downloads 62
Game settings 62
Games 62
General information xi
Genuine Enhancements 80
Get started 1
Groups 42

I

Inbox and other folders 29
Indicators 9
Info messages 30
Info, service, and my numbers 43
Install the SIM card and battery 1

K

Keypad lock (keyguard) 10
Keys and parts 5

L

Launch a game 62
Launch an application 63
Lights 45
Limited Warranty 91

M

Make a calendar note 57
Make a call 11
Medical devices 85
Memory full 24
Message counter 34

Message settings 31
Messages 18
Multimedia 31
Multimedia messages (MMS) 21
My presence 39
My shortcuts 45

N

Navigate the menus 17
Network services ix
Nokia Headset HDC-5 82
Nokia support on the Web xiv
Normal operating position 4
Note alarm 57
Notes 58

O

Open the fold 1
Operating environment 85
Options during a call 13
Options while browsing 67
Organizer 56
Other application options 63
Other settings 34
Overview of functions xi

P

Personal shortcut list 7
Phone 49
PIN codes xi
Plug and play service 4
Positioning information 72
Potentially explosive environments 87
Power saving 8
Predictive text input 15
Profiles 44
PUK codes xii

R

Read and reply to a multimedia message 23
Read and reply to an SMS message 20
Read and reply to e-mail 28
Receive a bookmark 70
Receive a flash message 26
Recent calls lists 35
Restore factory settings 54

S

Save names and phone numbers 36
Save numbers, items, or an image 36
Scripts over secure connection 69
Search for a contact 36
Security 53
Security code xi
Security module 73
Security settings
    Digital signature 75

English

Service commands 30
Service inbox 71
Service inbox settings 71
Set up browsing 65
Settings 14, 42, 44
Shared memory x
Shortcuts in the standby mode 8
SIM services 77
Speed dialing 11
Speed dials 42
Standby mode 7
Stop the alarm 56
Stopwatch 59
Subscribed names 40
Switch the phone on and off 3

T

Templates 21
Text and SMS e-mail 31
Text messages (SMS) 18
Themes 44
Time and date 47
To-do list 58
Tones 45
Traditional text input 15

U

Unsubscribe a contact 42

V

Vehicles 86
View subscribed names 41
Voice messages 29

W

Wallet
  signing documents via WAP 75
WAP services
  security module in SIM 73
  Signing documents 75
Web 65
Write a flash message 26
Write and send a multimedia message 22
Write and send an e-mail 27
Write and send an SMS message 19
Write compound words 15
Write text 14

Y

Your phone 5